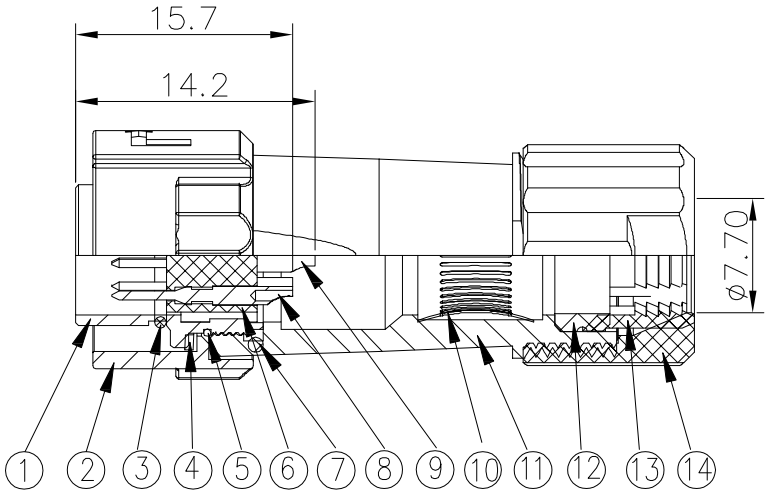


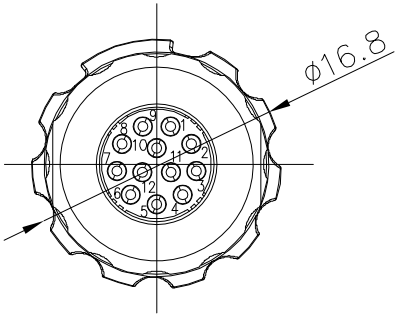


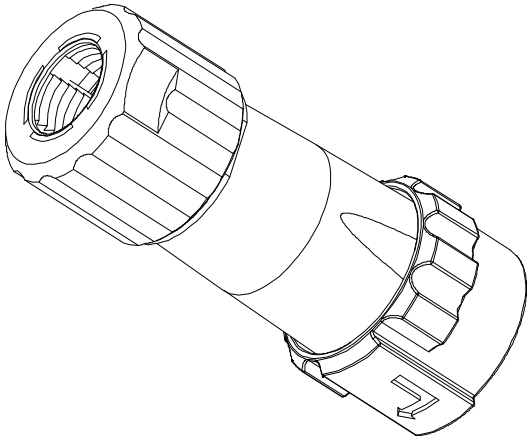

Current rating: 2 AMP.
Operating voltage: 30V
Contact resistance: 15mΩ/Max.
Durability: 1000 cycles
Temperature range: −25℃ to +85℃
ROHS compliant

| Item | Desc. | Material | Remark |
|---|---|---|---|
| 14 | Nut | PA66 | Color: brown |
| 13 | Clip | POM | Color: white |
| 12 | Sealing gasket | Rubber | Color: black |
| 11 | Cable sleeve | Zinc alloy | Plating: Ni |
| 10 | spring | Copper | Plating: Au |
| 9 | Terminals | Copper | Plating: Au |
| 8 | Terminals | Copper | Plating: Au |
| 7 | O-ring | rubber | Color: black |
| 6 | Housing | PPS | Color: black |
| 5 | Spring | Stainless spring steel | |
| 4 | gasket | Stainless spring steel | |
| 3 | Sealing ring | rubber | Color: black |
| 2 | Connection sleeve | Zinc alloy | Plating: Ni |
| 1 | Hood | Zinc alloy | Plating: Ni |

| SIDE | DATE | DESCRIPTION | APPROVER |
|---|---|---|---|
| 2 | 2025/09/17 | Change part number, change product name | Jack Chen |
| 1 | 2023/05/12 | First edition release | Jack Chen |

QUALITY SYMBOLS
□: CRITICAL
⊠: MAJOR
▽: ZERO DEFECT
▽: S.P.C

| Tolerance | |
|---|---|
| x. | ±0.60 |
| .x | ±0.40 |
| .xx | ±0.25 |

| | | | | | | | |
|---|---|---|---|---|---|---|---|
| NAME: | LF10WBP-12P male solder zinc alloy hood assembly | | | | PART NO. | B10-0LF10WBP-12P | |
| REV: | B | UNIT: | mm | DRW BY | CHK BY | APP BY | DRAWING NO. |
| SCALE: | N:1 | DATE: | 2023/05/12 | Huangmei | Jack Chen | | B10-164 |

lineconn 东莞市林诚塑胶电子有限公司
http://www.lineconn.com
TEL:0769-85181660 85181770