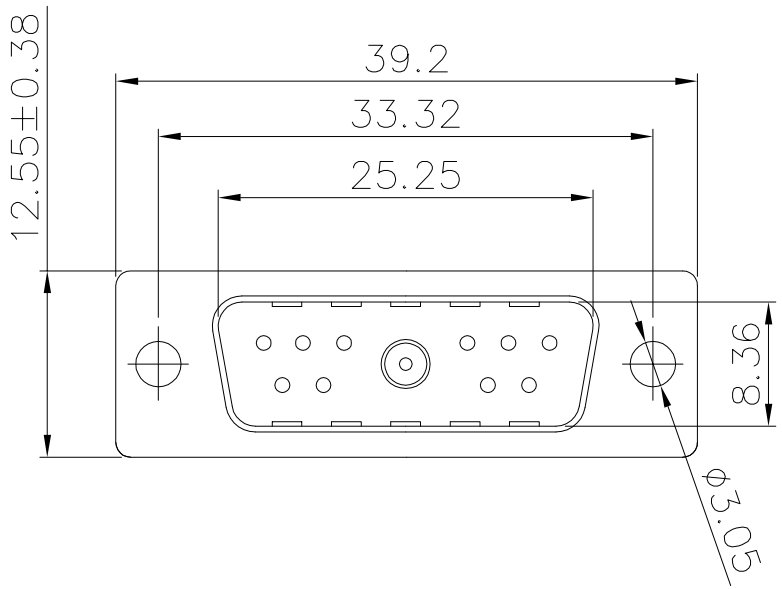

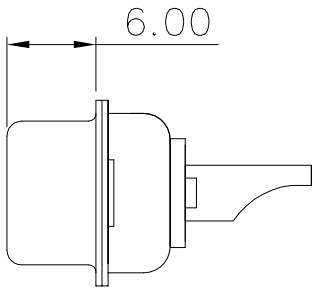

High power terminal:
Voltage current rating: 10~40A
Contact resistance: 2.7mΩ max.

Signal terminal:
Voltage current rating: 5A
Contact resistance: 10mΩ max.

Withstanding voltage: 1000V AC
Insulation resistance: 5000MΩ Min.
Temperature range: −55°C to +125°C
ROHS compliant

Part number:
B08−AW1311X0−X1
Terminal plating:
4: Full Au 2u"
5: Full Au 1u"
Current rating:
A: 10A, øA 1.7mm
B: 20A, øA 2.8mm
C: 30A, øA 3.2mm
D: 40A, øA 4.6mm

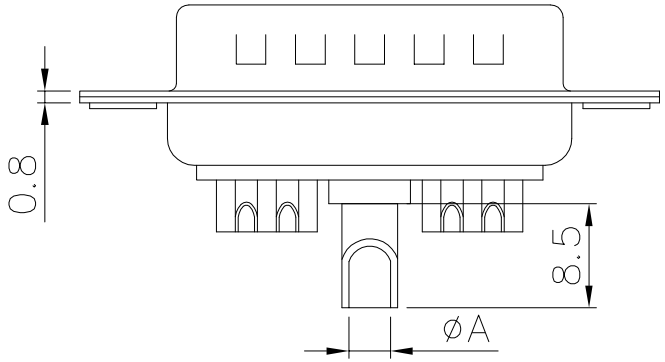

10A,20A,30A

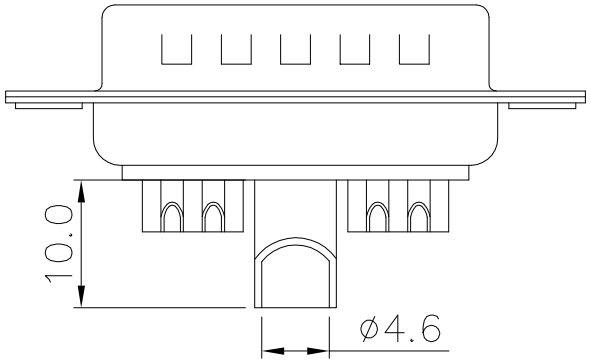

40A

Item	Desc.	Material	Remark
4	Rear shell	SPCC	Plating: Sn
3	Front shell	SPCC	Plating: Ni
2	Housing	PBT UL94V-0	Color: black
1	Terminal	Copper alloy	Plating: see part no.

SIDE	DATE	DESCRIPTION	APPROVER
A			
A	2023/08/22	Add 40A drawings,Change tolerance	Jack Chen
A	2016/09/09	First edition release	Jing Li

QUALITY SYMBOLS
□: CRITICAL ⊠: MAJOR
▽: ZERO DEFECTS ▽: S.P.C

Tolerance	
x.	±0.60
.x	±0.40
.xx	±0.25

NAME:	11W1 male solder,cup 8.5mm				PART NO.	B08−AW1311X0−X1	
REV:	B	UNIT:	mm	DRW BY	CHK BY	APP BY	DRAWING NO.
SCALE:	N:1	DATE:	2016/09/09	Huangmei	Jack Chen		B08−035

lineconn 东莞市林诚塑胶电子有限公司
http://www.lineconn.com
TEL: 0769−85181660 85181770

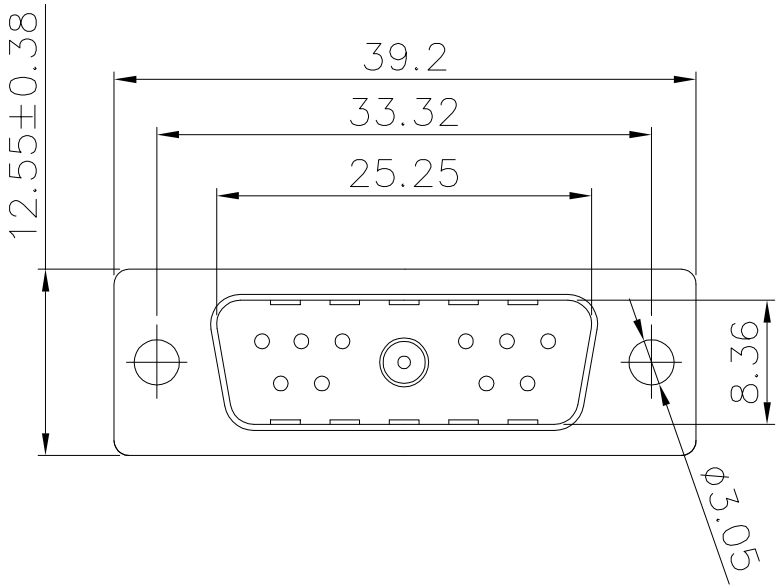

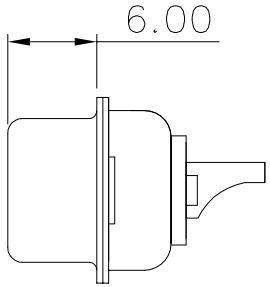

High power terminal:
Voltage current rating: 10~40A
Contact resistance: 2.7mΩ max.

Signal terminal:
Voltage current rating: 5A
Contact resistance: 10mΩ max.

Withstanding voltage: 1000V AC
Insulation resistance: 5000MΩ Min.
Temperature range: −55°C to +125°C
ROHS compliant

Part number:
B08−AW1311X0−X2
Terminal plating:
4: Full Au 2u"
5: Full Au 1u"
Current rating:
A: 10A, øA 1.7mm
B: 20A, øA 2.8mm
C: 30A, øA 3.2mm
D: 40A, øA 4.6mm

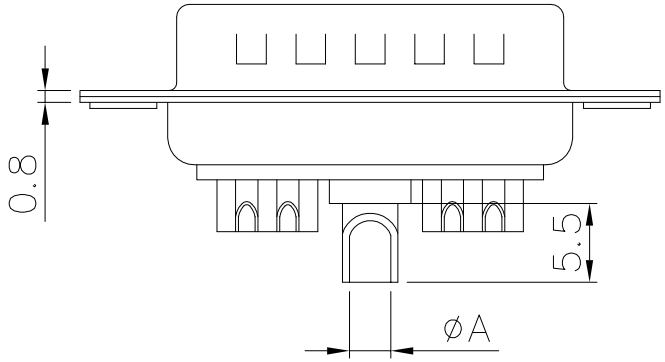

10A,20A,30A

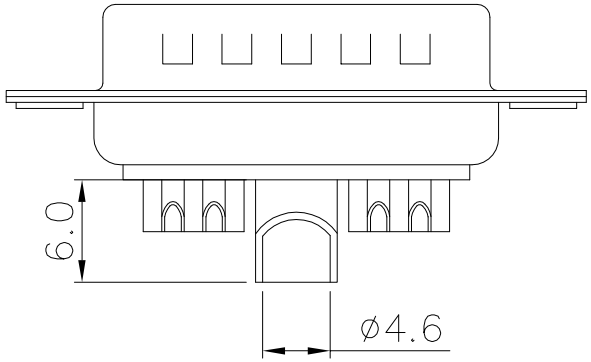

40A

Item	Desc.	Material	Remark
4	Rear shell	SPCC	Plating: Sn
3	Front shell	SPCC	Plating: Ni
2	Housing	PBT UL94V-0	Color: black
1	Terminal	Copper alloy	Plating: see part no.

SIDE	DATE	DESCRIPTION	APPROVER
	2021/08/23	First edition release	Jack Chen

QUALITY SYMBOLS
□: CRITICAL ⊠: MAJOR
▽: ZERO DEFECT ▽: S.P.C

Tolerance	
x.	±0.60
.x	±0.40
.xx	±0.25

NAME:	11W1 male solder,cup 5.5mm				PART NO.	B08−AW1311X0−X2	
REV:	A	UNIT:	mm	DRW BY	CHK BY	APP BY	DRAWING NO.
SCALE:	N:1	DATE:	2021/08/23	Huangmei	Jack Chen		B08−140

lineconn 东莞市林诚塑胶电子有限公司
http://www.lineconn.com
TEL: 0769−85181660 85181770