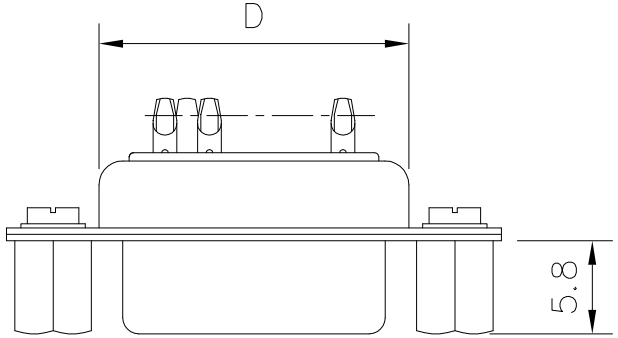

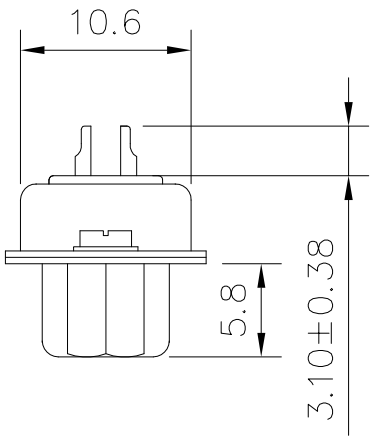

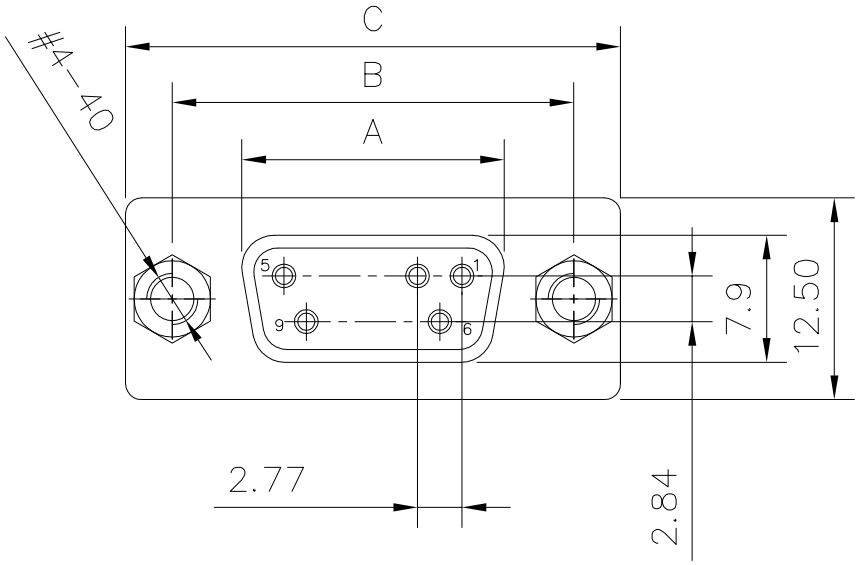

Pin no.	A	B	C±0.38	D
09	16.33	24.99	30.81	19.3
15	24.66	33.32	39.14	27.7
25	38.38	47.04	53.04	41.3
37	54.84	63.50	69.32	57.7

Current rating: 3A
Withstanding voltage: 1000V AC
Insulation resistance: 1000MΩ Min.
Temperature range: −55℃ to +125℃
ROHS compliant
Part number:

B05−0XX4X1X0−E5

No.of contact:
09: 9pos
15: 15pos
25: 25pos
37: 37pos
Housing color:
1: Black
5: White
6: Blue
Contact area:
A: G/F
C: Au 3u"
k: Au 30u"

Item	Desc.	Material	Remaks
5	Nut	Steel	Plating:Ni
4	Rear shell	SPCC	Plating:Sn
3	Front shell	SPCC	Plating:Ni
2	Housing	PBT+30%GF	Color:see part no.
1	Terminal	Copper alloy	Contact area:see part no. Solder area:Sn

SIDE	DATE	DESCRIPTION	APPROVER
4	2022/07/22	Add Terminal plating	Jack Chen
3	2022/04/19	Change tolerance note	Jack Chen
1	2010/08/29	First edition release	King Zhou

QUALITY SYMBOLS
□: CRITICAL
⊠: MAJOR
▽: ZERO DEFECT
▽: S.P.C

Tolerance	
x.	±0.60
.x	±0.40
.xx	±0.25

NAME:	D-SUB female solder,front riveted 5.8mm nuts				PART NO.	B05-0XX4X1X0-E5	
REV:	D	UNIT:	mm	DRW BY	CHK BY	APP BY	DRAWING NO.
SCALE:	N:1	DATE:	2010/08/29	Huangmei	Jack Chen		B05-089

lineconn 东莞市林诚塑胶电子有限公司 http://www.lineconn.com TEL:0769-85181660 85181770