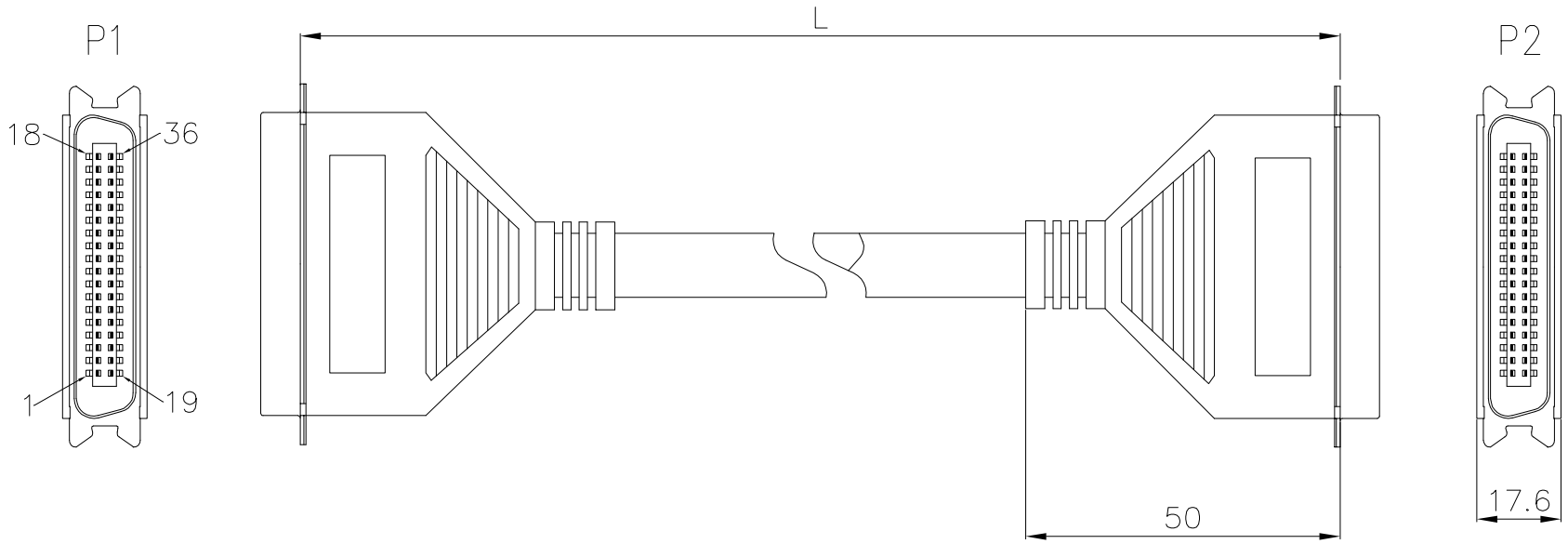


Pin assignment

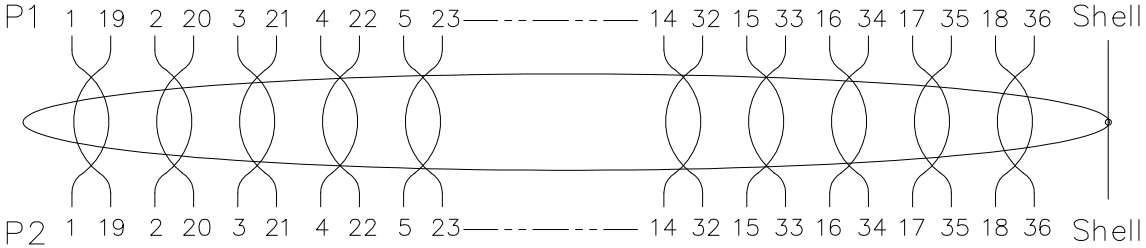


Notes:
1.Electrical test: 100% open,short&miss wire test.
2.Conductor resistance: 5 ohms max.
3.Insulator resistance: 1M ohms min, DC 300V 0.01sec.
4.ROHS compliant
5.Part number description: A21-03611XXX-01,
XXX: 001=length: 10cm

| Item | Part name | Description | Qty |
|---|---|---|---|
| 6 | Cable | UL20276 18.5P*28AWG+Foamed PP Tape+ABD, PVC jacket,color: black,OD 8.0mm | 1pcs |
| 5 | Copper foil | Copper foil W=25mm | NA |
| 4 | Overmold | 45P PVC color: black | NA |
| 3 | Mold | PE | NA |
| 2 | Connector | Centronics(57) 36pin male solder, housing color: blue,simple makou type | 1pcs |
| 1 | Connector | Centronics(57) 36pin male solder, housing color: blue,simple makou type | 1pcs |

| SIDE | DATE | DESCRIPTION | APPROVER |
|---|---|---|---|
| 4 | 2022/11/26 | Add dimension annotations | Carl Hu |
| 3 | 2021/06/12 | Change part number | Jack Chen |
| 1 | 2009/07/10 | First edition release | Jack Chen |

QUALITY SYMBOLS
□: CRITICAL
⊠: MAJOR
▽: ZERO DEFECT
▽: S.P.C

Tolerance

| Length(mm) | Tolerance(mm) |
|---|---|
| 300~2000 | ±50 |
| 2001~5000 | ±100 |
| 5001~ | ±150 |

| | | | | | | | |
|---|---|---|---|---|---|---|---|
| NAME: | Centronics(57) 36pin male to male cable,molded type | | | | PART NO. | A21-03611XXX-01 | |
| REV: | D | UNIT: | mm | DRW BY | CHK BY | APP BY | DRAWING NO. |
| SCALE: | NONE | DATE: | 2009/07/10 | Yugong | Carl Hu | | A21-001 |

lineconn 东莞市林诚塑胶电子有限公司
http://www.lineconn.com
TEL:0769-85181660 85181770