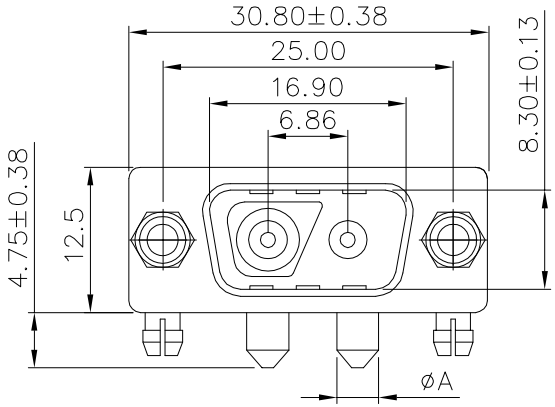

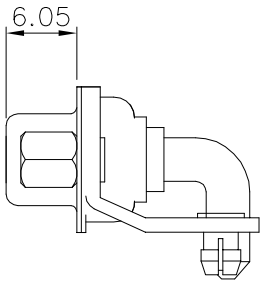

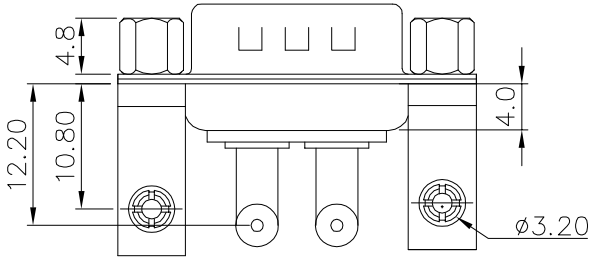

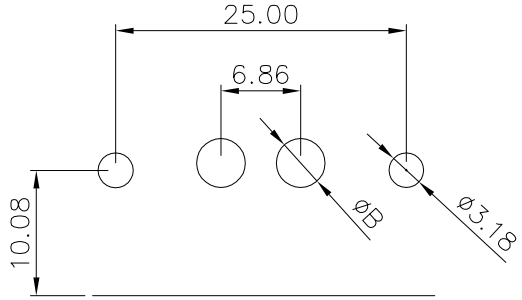

PCB layout

Voltage current rating: 10~40A
Dielectric withstanding voltage: 1000V AC
Insulation resistance: 5000Megaohms min.
Temperature range: −55℃ to +125℃
Durability: 500 cycles
ROHS compliant

Part number:
B09−2V2511XD−X1
Terminal plating:
4: Full Au 2u"
5: Full Au 1u"
Current Rating:
A: 10 AMPS Dim.A ø1.7 Dim.B ø2.2
B: 20 AMPS Dim.A ø2.8 Dim.B ø3.3
C: 30 AMPS Dim.A ø3.2 Dim.B ø3.7
D: 40 AMPS Dim.A ø3.7 Dim.B ø4.2

Item	Desc.	Material	Remark
6	Screw	Steel	Plating: Ni
5	Foothold	SPCC	Plating: Ni
4	Rear shell	SPCC	Plating: Sn
3	Front shell	SPCC	Plating: Ni
2	Housing	PBT UL94V−0	Color: black
1	Terminal	Copper alloy	Plating: see part no.

SIDE	DATE	DESCRIPTION	APPROVER
3	2021/11/23	Add terminal plating type	Jack Chen
2	2021/06/14	Change part number	Jack Chen
1	2019/09/04	First edition release	Jack Chen

QUALITY SYMBOLS
□: CRITICAL
⊠: MAJOR
▽: ZERO DEFECT
▽: S.P.C

Tolerance
x. ±0.60
.x ±0.40
.xx ±0.25

NAME:	2V2 male right angle, riveted insert,lock screw				PART NO.	B09−2V2511XD−X1	
REV:	C	UNIT:	mm	DRW BY	CHK BY	APP BY	DRAWING NO.
SCALE:	N:1	DATE:	2019/09/04	Huangmei	Jack Chen		B09−005

lineconn 东莞市林诚塑胶电子有限公司
http://www.lineconn.com
TEL:0769−85181660 85181770