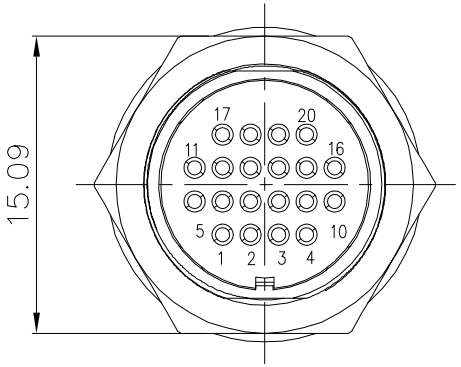

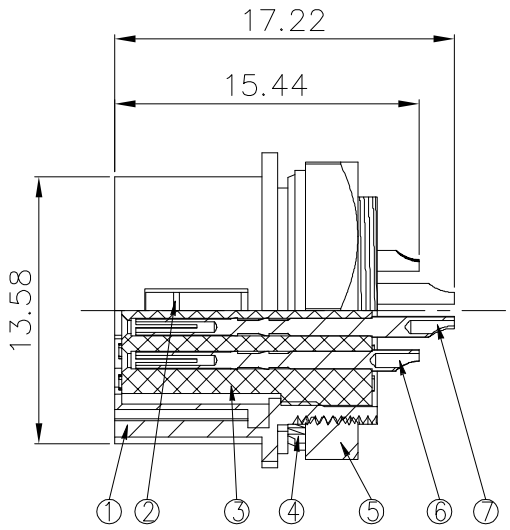

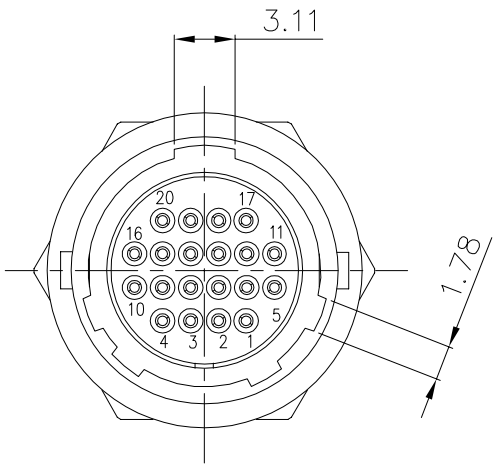

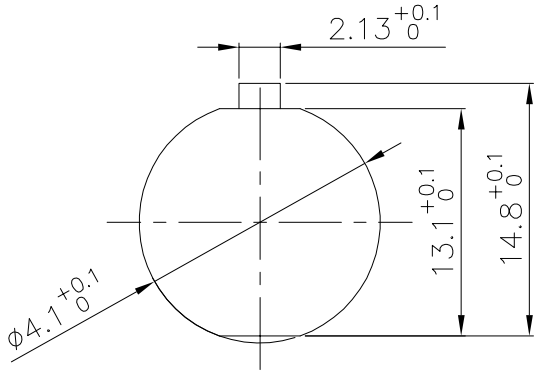

Recommended panel size

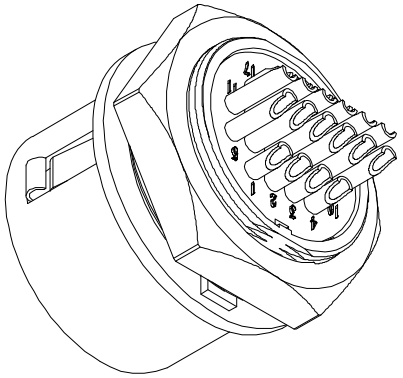

Current rating: 2A
Rated voltage: 100V
Contact resistance: 10mΩ Max.
Durability: 1000 cycles
Temperature range: −25℃ to +85℃
ROHS compliant
Waterproof rating: IP67

Item	Desc.	Material	Remark
7	terminal	Copper alloy	Plating: Au
6	terminal	Copper alloy	Plating: Au
5	Nut	Copper alloy	Plating: Ni
4	Gasket	Stainless steel	
3	Housing	PPS	Color: black
2	Spring	QBe1.9	
1	Hood	Zinc alloy	Plating: Ni

SIDE	DATE	DESCRIPTION	APPROVER
3			
2			
1	2024/07/29	First edition release	Carl Hu

QUALITY SYMBOLS
□: CRITICAL
⊠: MAJOR
▽: ZERO DEFECT
▽: S.P.C

Tolerance	
x.	±0.60
.x	±0.40
.xx	±0.25

NAME:	HR10A−13R−20S female solder rear lock panel			PART NO.	B10−03PZ20SH−KGD		
REV:	A	UNIT:	mm	DRW BY	CHK BY	APP BY	DRAWING NO.
SCALE:	N:1	DATE:	2024/07/29	Yugong	Carl Hu		B10−194

lineconn 东莞市林诚塑胶电子有限公司
http://www.lineconn.com
TEL:0769−85181660 85181770