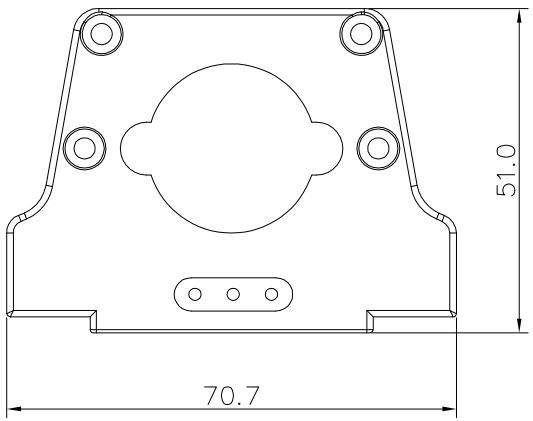

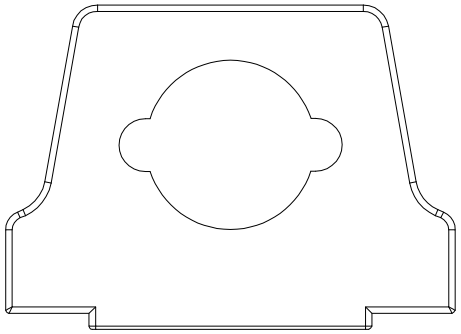

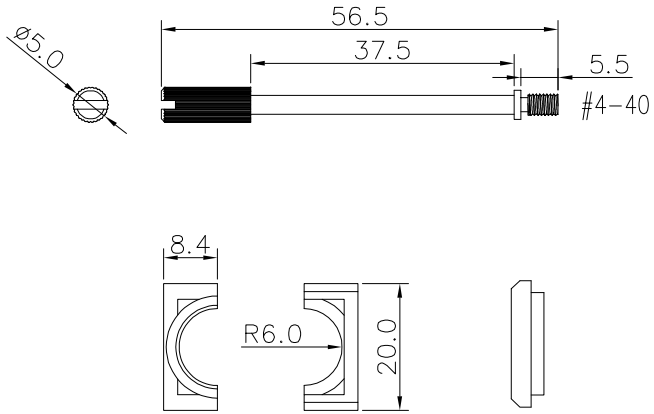

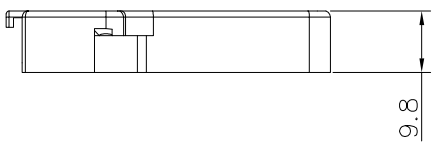

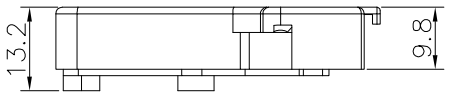

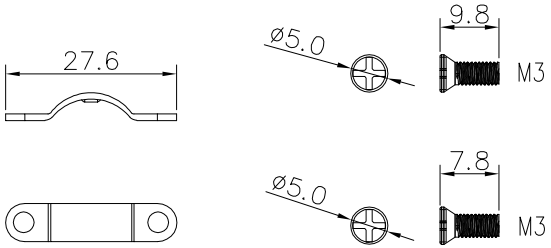

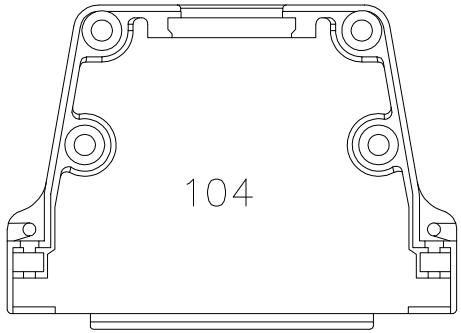

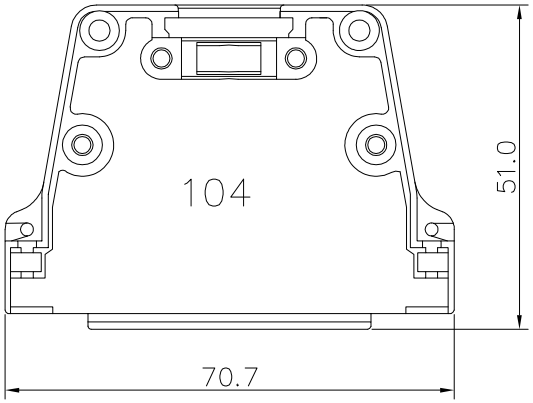

ROHS compliant

Item	Desc.	Material	Remark	Quantity
6	Steel clip	Steel	Plating:Ni	1pcs
5	Clip	Zinc alloy	Plating:Ni	2pcs
4	M3*9.8mm screw	Steel	Plating:Ni	2pcs
3	M3*7.8mm screw	Steel	Plating:Ni	2pcs
2	#4-40 screw	Steel	Plating:Ni	2pcs
1	Hood	Zinc alloy	Plating:Ni	1set

SIDE	DATE	DESCRIPTION	APPROVER
A	2024/05/16	First edition release	Jack Chen

QUALITY SYMBOLS
□: CRITICAL
⊠: MAJOR
▽: ZERO DEFECT
▽: S.P.C

Tolerance	
X.	±0.80
.X	±0.50
.XX	±0.25

NAME:	D-SUB 104pin zinc alloy hood				PART NO.	B05-104NN8N9-1CH	
REV:	A	UNIT:	mm	DRW BY	CHK BY	APP BY	DRAWING NO.
SCALE:	N:1	DATE:	2024/05/16	Huangmei	Jack Chen		B05-307

lineconn 东莞市林诚塑胶电子有限公司
http://www.lineconn.com
TEL:0769-85181660 85181770