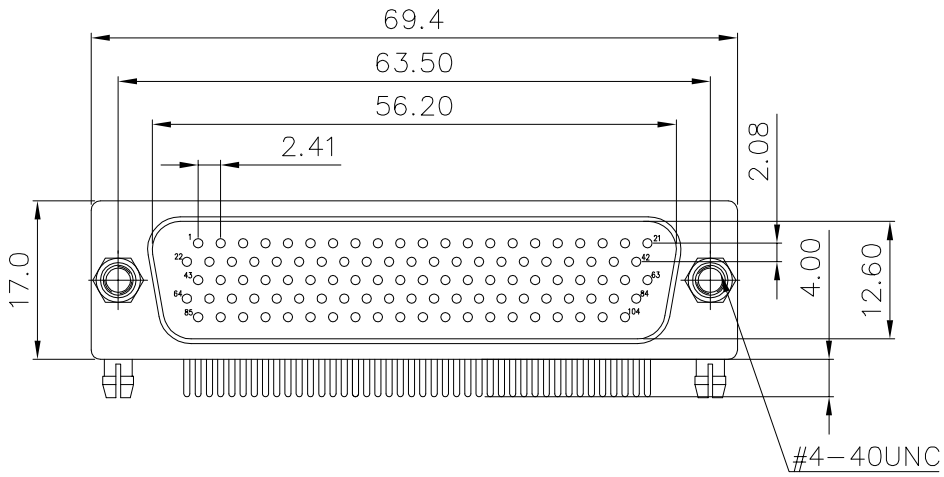

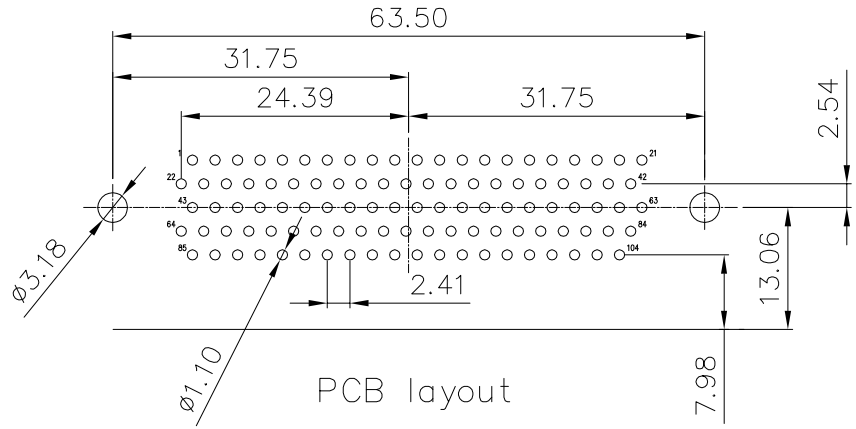

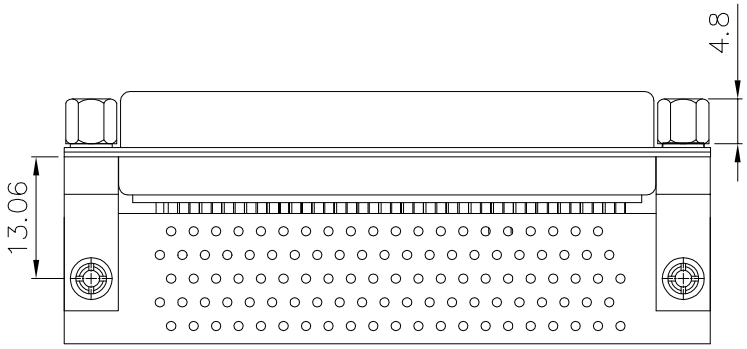

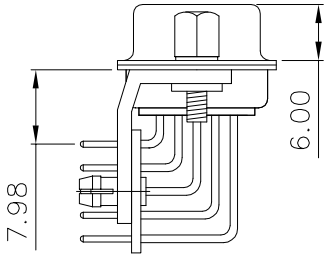

Current rating: 5 AMP.
Withstanding voltage: 1000V AC
Insulation resistance: 5000MΩ Min.
Temperature range: −45℃ to +125℃
ROHS compliant

Item	Desc.	Material	Remark
7	Riveted insert	Brass	Plating: Ni
6	Board lock	Brass	Plating: Sn
5	Nut	Steel	Plating: Ni
4	Housing	PBT+30%GF	Color: black
3	Rear shell	SPCC	Plating: Sn
2	Front shell	SPCC	Plating: Ni
1	Terminal	Brass	Terminal finish: full gold 2u"

SIDE	DATE	DESCRIPTION	APPROVER
A	2021/07/03	Changed part number, changed tolerance	Jack Chen
A	2019/09/22	First edition release	Jack Chen

QUALITY SYMBOLS
□: CRITICAL
⊠: MAJOR
▽: ZERO DEFECT
▽: S.P.C

Tolerance	
x.	±0.60
.x	±0.40
.xx	±0.25

NAME:	HD.D-SUB machined pin 104pin male right angle,7.98mm,riveted board lock,nut 4.8mm				PART NO.	B04-1045114D-02	
REV:	B	UNIT:	mm	DRW BY	CHK BY	APP BY	DRAWING NO.
SCALE:	N:1	DATE:	2019/09/22	Huangmei	Jack Chen		B04-057

lineconn 东莞市林诚塑胶电子有限公司
http://www.lineconn.com
TEL:0769-85181660 85181770