Pin	A	B	C±0.38	D
9	16.30	24.99	30.81	11.08
15	24.66	33.32	39.14	19.39
25	38.38	47.04	53.04	33.24
37	54.84	63.50	69.32	49.86

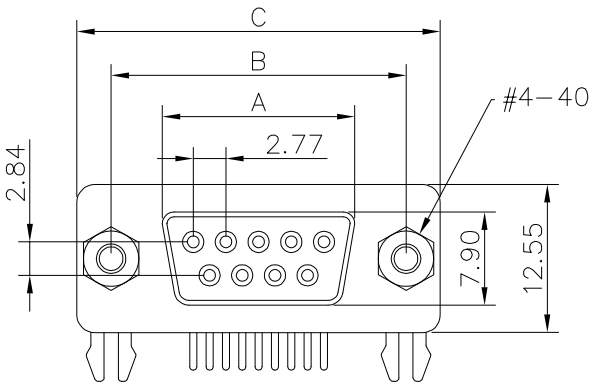

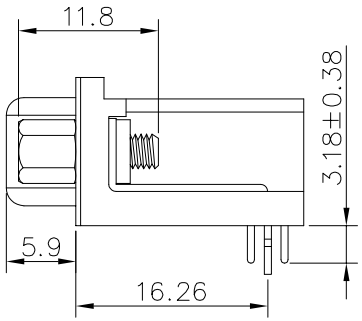

Current rating: 3A.
Withstanding voltage: 1000V AC
Insulation resistance: 1000MΩ min.
Contact resistance: 35mΩ Max
Temperature range: −55℃ to +125℃
Durability: 500 cycles
ROHS compliant
Part number:
B05−0XX611AD−H4
Pin No.:
09: 9pin
15: 15pin
25: 25pin
37: 37pin

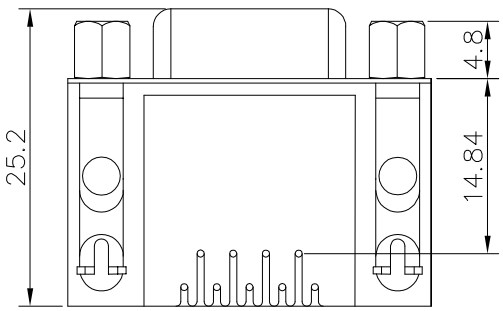

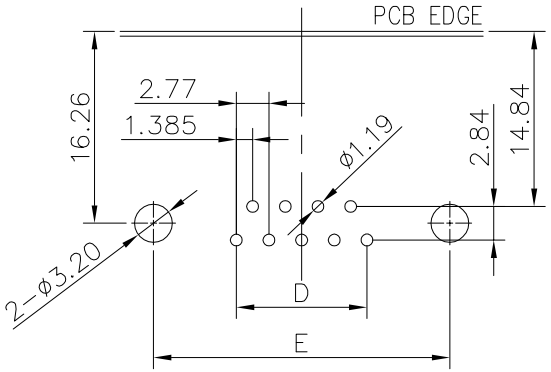

PCB layout

Item	Desc.	Material	Remaks
5	Nut	Steel	Palting: Ni
4	Board lock	Copper alloy	Palting: Sn
3	Housing	PBT+30%GF	Color: black
2	Shell	SPCC	Palting: Ni
1	Terminal	Copper alloy	Contact area: G/F Solder area: Sn Under−plating: Ni

SIDE	DATE	DESCRIPTION	APPROVER
4	2025/07/10	Fix bug	Shuo Cao
3	2024/10/16	Change tolerances, change electrical properties	Shuo Cao
1	2010/07/29	First edition release	King Zhou

QUALITY SYMBOLS
□: CRITICAL
⊠: MAJOR
▽: ZERO DEFECT
▽: S.P.C

Tolerance	
x.	±0.60
.x	±0.40
.xx	±0.25

NAME:	D−SUB female right angle 14.84mm, riveting board lock,lock 4.8mm nut			PART NO.	B05−0XX611AD−H4		
REV:	D	UNIT:	mm	DRW BY	CHK BY	APP BY	DRAWING NO.
SCALE:	N:1	DATE:	2010/07/29	Huangmei	Shuo Cao		B05−012

lineconn 东莞市林诚塑胶电子有限公司
http://www.lineconn.com
TEL:0769−85181660 85181770