Pin No.	A	B	C	D	E
15	16.33	24.99	30.81	19.0	2.29
26	24.66	33.32	39.14	27.7	2.29
44	38.38	47.04	53.04	41.0	2.29
62	54.84	63.50	69.32	57.3	2.41

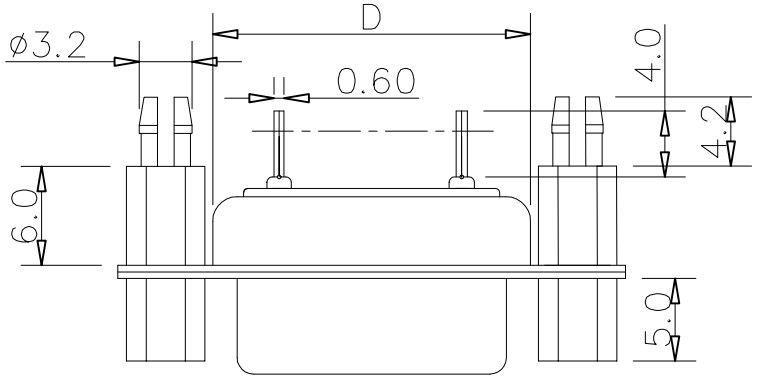

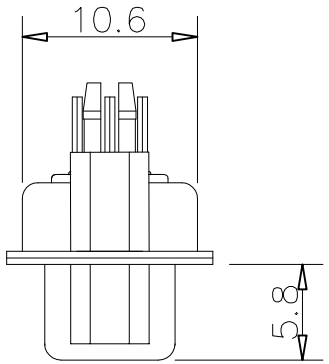

Current rating: 3A
Withstanding voltage: 1000V AC
Insulation resistance: 1000MΩ Min.
Temperature range: −55℃ to +125℃
Part No.:

B04−0XX8X1AD−E5

No.of contact:
15: 15pos
26: 26pos
44: 44pos
62: 62pos

Housing color:
1: Black
5: White
△6: Blue

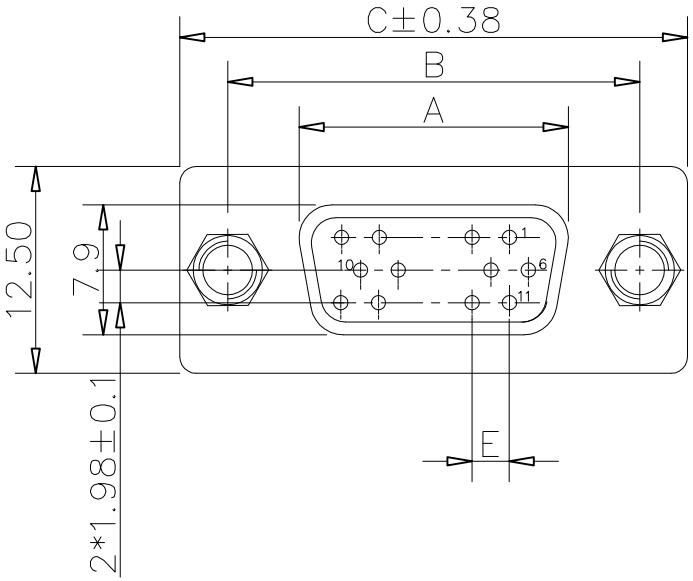

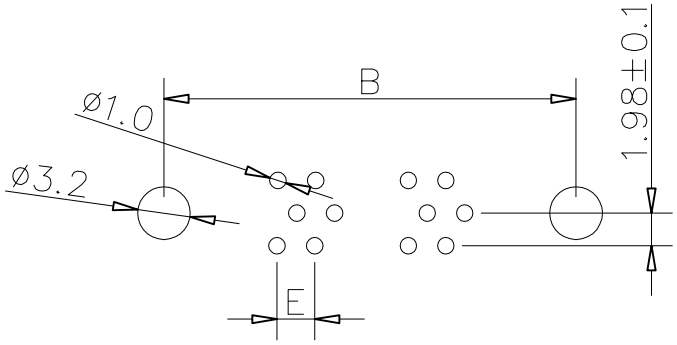

PCB Lay out

Item	Desc.	Material	Remark
6	Screw	Steel	Plating: Ni
5	Board lock	Copper alloy	Plating: Ni
4	Housing	PBT+30%GF	Color: see part no.
3	Rear shell	SPCC	Plating: Sn
2	Front shell	SPCC	Plating: Ni
1	Terminal	Copper alloy	Contact area: G/F Solder area: Sn Under−plating: Ni

SIDE	DATE	DESCRIPTION	APPROVER
△2	2014/09/17	Add housing color	Jing Li
△1	2014/09/02	First edition release	Jing Li

QUALITY SYMBOLS
□: CRITICAL ⊠: MAJOR
▽: ZERO DEFECTS ▽: P.C

Tolerance	
x.	±0.60
.x	±0.40
.xx	±0.25

NAME:	HD.D−SUB female vertical for PCB				PART NO.	B04−0XX8X1AD−E5	
REV:	B	UNIT:	mm	DRW BY	CHK BY	APP BY	DRAWING NO.
SCALE:	N:1	DATE:	2014/09/02	Jing Li	King Zhou		B04−030

lineconn 东莞市林诚塑胶电子有限公司
http://www.lineconn.com
TEL: 0769−85181660 85181770