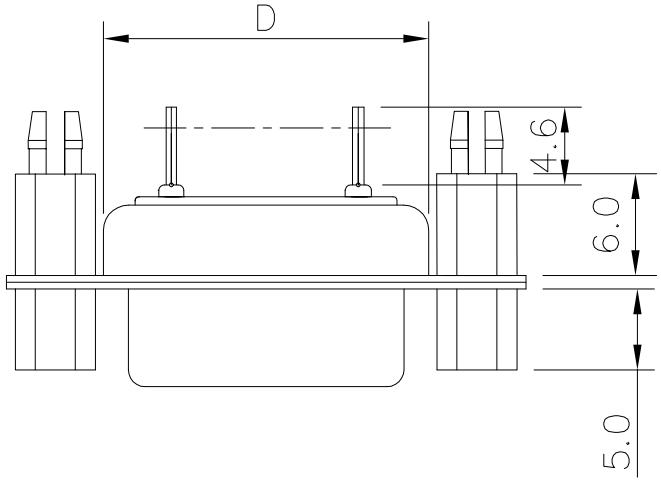

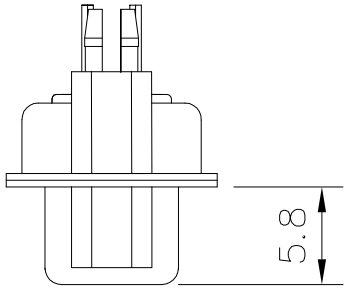

No.of contact	A	B	C	D
09	16.33	24.99	30.81	18.9
25	24.66	33.32	39.20	27.5
25	38.38	47.04	53.05	41.3
37	54.84	63.50	69.40	57.7

Current rating: 3A
Withstanding voltage: 1000V AC
Insulation resistance: 1000MΩ Min.
Temperature range: −45℃ to +105℃
ROHS compliant

Part number:
B05−0XX8X1AD−E5
No.of contact:
09: 09pos
15: 15pos
25: 25pos
37: 37pos
Housing color:
1: Black
5: White
6: Blue

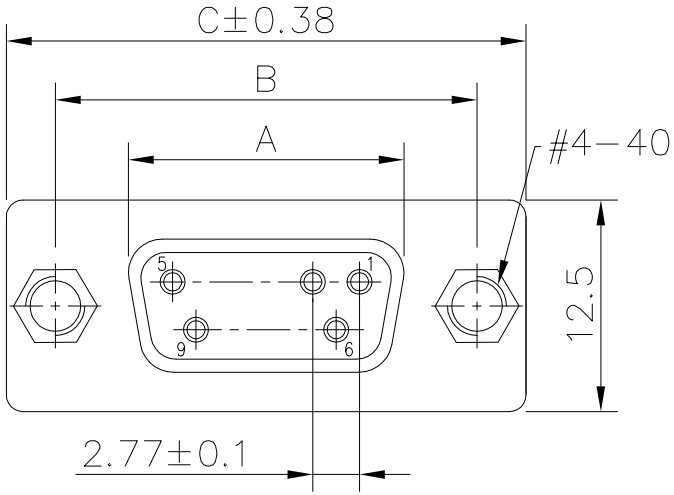

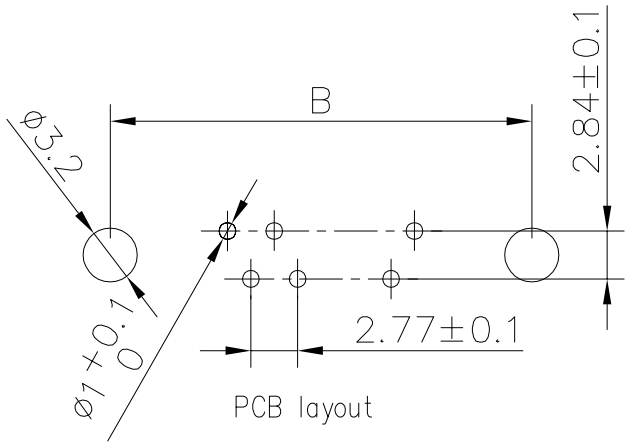

PCB layout

Item	Desc.	Material	Remark
7	Board lock	Copper alloy	Palting: Sn
6	Nut	Steel	Palting: Ni
5	Rear shell	SPCC	Palting: Sn
4	Front shell	SPCC	Palting: Ni
3	Rear housing	PBT+30%GF	Color: see part no.
2	Front housing	PBT+30%GF	Color: see part no.
1	Terminal	Copper alloy	Contact area: G/F Solder area: Sn Under−plating: Ni

SIDE	DATE	DESCRIPTION	APPROVER
4	2023/06/24	Changed electrical properties	Jack Chen
3	2014/11/25	Add dimension	Jack Chen
1	2014/09/02	First edition release	Jing Li

QUALITY SYMBOLS
□: CRITICAL
⊠: MAJOR
▽: ZERO DEFECT
▽: S.P.C

Tolerance	
x.	±0.60
.x	±0.40
.xx	±0.25

NAME:	D−SUB female vertical for PCB,rear riveted board lock,front lock 5.0mm nut				PART NO.	B05−0XX8X1AD−E5	
REV:	D	UNIT:	mm	DRW BY	CHK BY	APP BY	DRAWING NO.
SCALE:	N:1	DATE:	2014/09/02	Huangmei	Jack Chen		B05−091

lineconn 东莞市林诚塑胶电子有限公司 http://www.lineconn.com TEL:0769−85181660 85181770