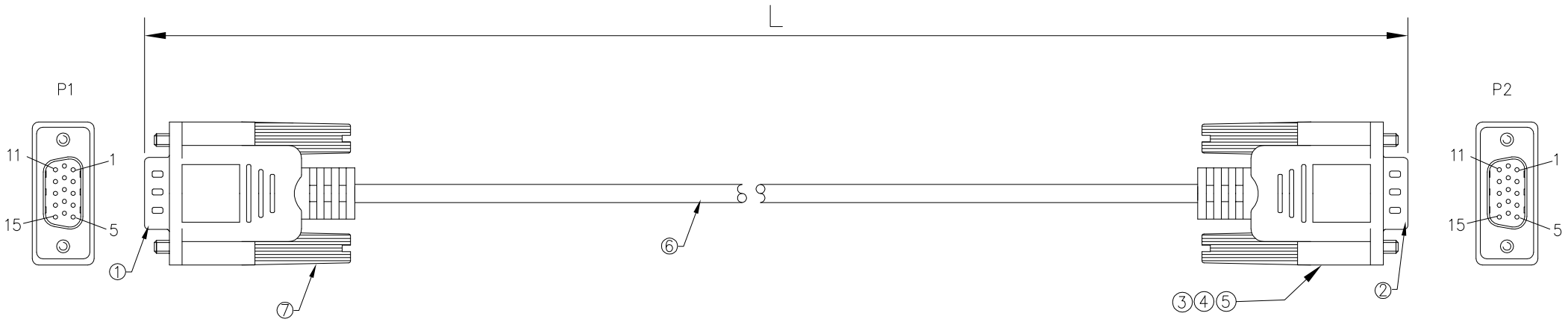

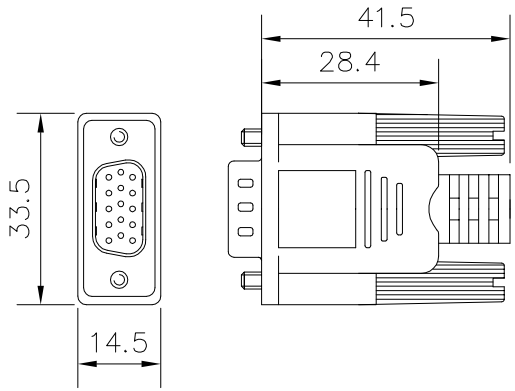

Pin assignment

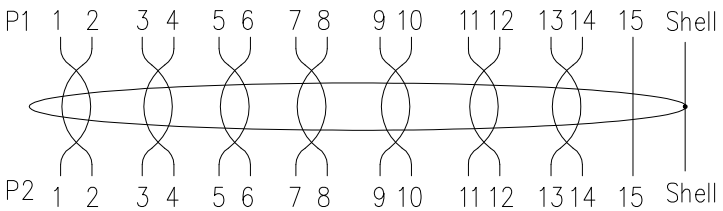

Notes:
1.Electrical test:100% open,short&miss wire test.
2.Conductor resistance:5 ohms max.
3.Insulator resistance: 1m ohms min, dc 300v 0.01sec.
4.ROHS compliant
5.Part number description:A04-01511XXX-04,
XXX:001=length:10cm

Item	Part name	Description	Qty
7	Screw	Screw 4-40# Ni(Q24 black)	4pcs
6	Cable	24AWG*8P+AB,PVC jacket,color:black,OD 7.8mm	NA
5	Copper foil	Copper foil	NA
4	Over mold	45P PVC color: black	NA
3	Inside mold	PE	NA
2	Connector	HD.D-SUB 15pin male solder,black	1pcs
1	Connector	HD.D-SUB 15pin male solder,black	1pcs

SIDE	DATE	DESCRIPTION	APPROVER
⚠	2023/03/14	Changed the screw description	Carl Hu
⚠	2023/02/06	First edition release	Jack Chen

QUALITY SYMBOLS
□: CRITICAL
⊠: MAJOR
▽: ZERO DEFECT
▽: S.P.C

Tolerance

Length(mm)	Tolerance(mm)
300~2000	±50
2001~5000	±100
5001~	±150

NAME:	HD.D-SUB 15pin male to male cable				PART NO.	A04-01511XXX-04	
REV:	B	UNIT:	mm	DRW BY	CHK BY	APP BY	DRAWING NO.
SCALE:	NONE	DATE:	2023/02/06	Yugong	Carl Hu		A04-027

lineconn 东莞市林诚塑胶电子有限公司
http://www.lineconn.com
TEL:0769-85181660 85181770