Pin	2Pin	3Pin	4Pin	5Pin	6Pin	7Pin	8Pin
ø: X	1.00	1.00	1.00	1.00	0.80	0.80	0.80
A code							
B code							
D code							

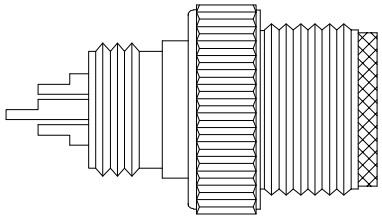

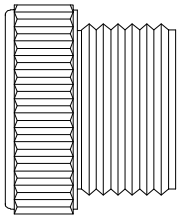

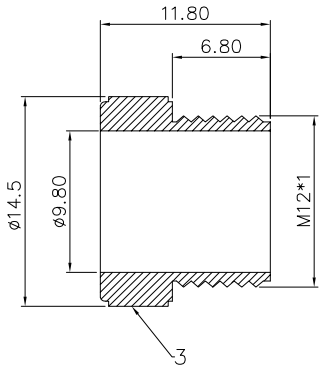

Current rating: 2pin~5pin 4A
6pin~8pin 2A
Rated voltage: 2pin~5pin 60V
6pin~8pin 30V
Contact resistance: 10mΩ Max.
Durability: 500 cycles
Temperature range: −40℃ to +105℃
ROHS compliant
Waterproof rating: IP67
Part number:
B10−M12X XX31−W4
Code:
A: A code
B: B code
D: D code
Pin No.:
02: 2pin 03: 3pin
04: 4pin 05: 5pin
06: 6pin 07: 7pin
08: 8pin

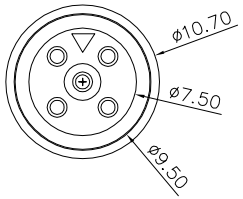

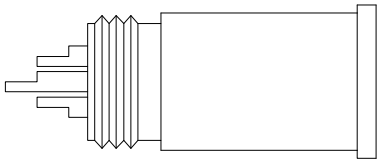

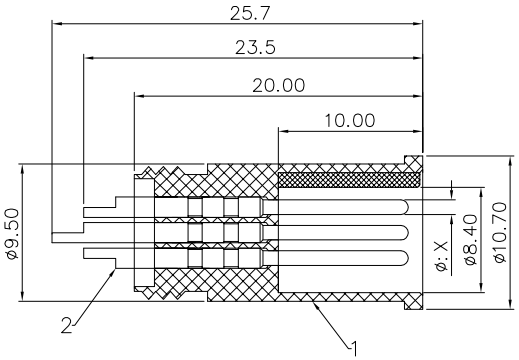

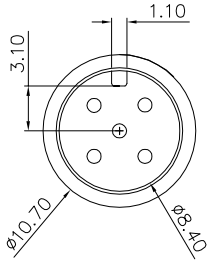

Item	Desc.	Material	Remark
4	O−ring	EPDM	
3	Nut	Brass	Plating: Ni
2	Terminal	Brass	Plating: Au
1	Housing	PA66+GF	Color: black

SIDE	DATE	DESCRIPTION	APPROVER
A	2023/04/12	First edition release	Jack Chen

QUALITY SYMBOLS
□: CRITICAL
⊠: MAJOR
▽: ZERO DEFECT
▽: S.P.C

Tolerance	
x.	±0.60
.x	±0.40
.xx	±0.25

NAME:	M12 male solder				PART NO.	B10−M12X XX31−W4	
REV:	A	UNIT:	mm	DRW BY	CHK BY	APP BY	DRAWING NO.
SCALE:	N:1	DATE:	2023/04/12	Huangmei	Jack Chen		B10−163

lineconn 东莞市林诚塑胶电子有限公司
http://www.lineconn.com
TEL:0769−85181660 85181770