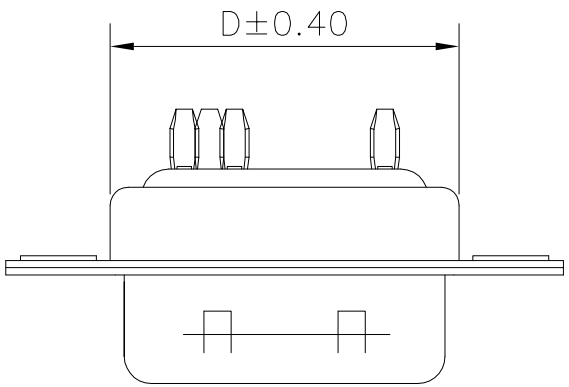

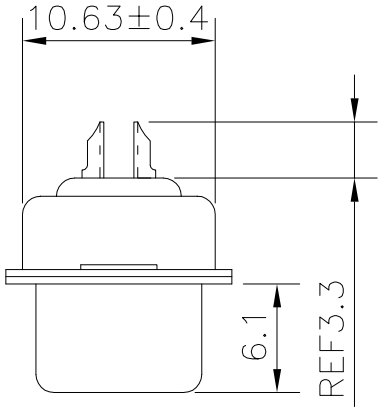

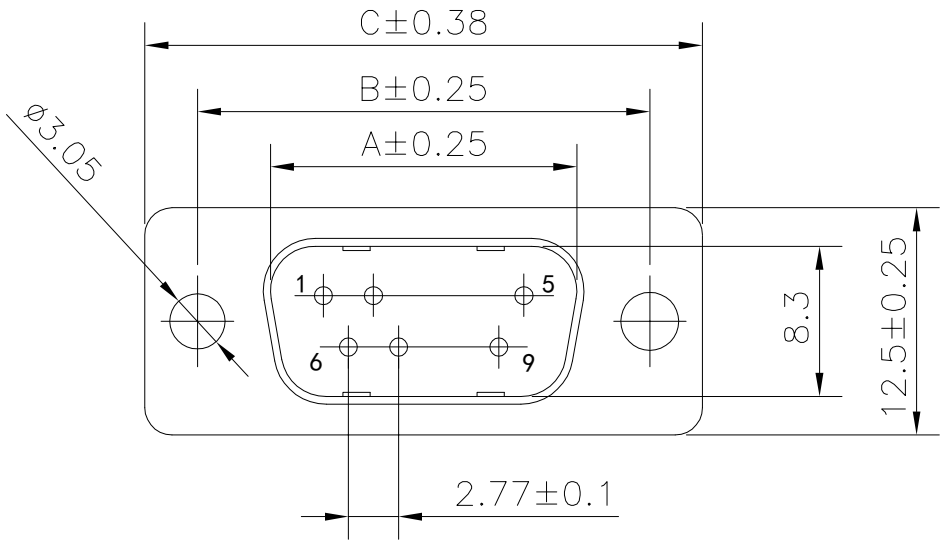

No. of contact	A	B	C	D
△2 09	16.9	25.0	30.8	18.9
15	25.2	33.3	39.1	27.5
25	39.0	47.0	53.0	41.3
37	55.4	63.5	69.3	57.7

Voltage current rating: 3 AMP.
Dielectric withstanding voltage: 1000V AC
Insulation resistance: 1000MΩ min.
Temperature range: −55℃ to +125℃
ROHS compliant
Part No.:

B05−0XX3X1XN−A1

Pin No.:
09: 9pin
15: 15pin
25: 25pin
37: 37pin
Housing color:
1: Black
5: White
6: Blue
Terminal plating:
A: G/F
△4 C: Au 3u"
E: Au 5u"
△3 H: Au 15u"

Item	DESC.	Material	Remaks
4	Rear shell	SPCC	Palting: Sn
3	Front shell	SPCC	Palting: Ni
2	Housing	PBT+30%GF	Color: see part no.
1	Terminal	Copper alloy	Contact area: see part no. Solder area: Sn

SIDE	DATE	DESCRIPTION	APPROVER
△4	2023/04/11	Add Terminal plating type	Jack Chen
△3	2023/02/09	Add Terminal plating type	Jack Chen
△1	2009/05/26	First edition release	Jing Li

QUALITY SYMBOLS
□: CRITICAL
⊠: MAJOR
▽: ZERO DEFECT
▽: S.P.C

Tolerance	
x.	±0.60
.x	±0.40
.xx	±0.25

NAME:	D-SUB male solder,one-piece housing				PART NO.	B05-0XX3X1XN-A1	
REV:	D	UNIT:	mm	DRW BY	CHK BY	APP BY	DRAWING NO.
SCALE:	N:1	DATE:	2009/05/26	Huangmei	Jack Chen		B05-017

lineconn 东莞市林诚塑胶电子有限公司
http://www.lineconn.com
TEL:0769-85181660 85181770