Pin no.	A	B	C	D
09	16.9	25.0	30.8	19.3
15	25.2	33.3	39.1	27.5
25	39.0	47.0	53.0	41.3
37	55.4	63.5	69.3	57.7

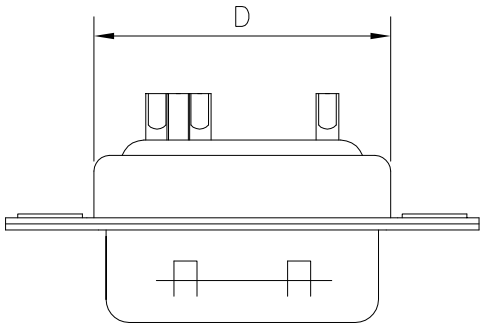

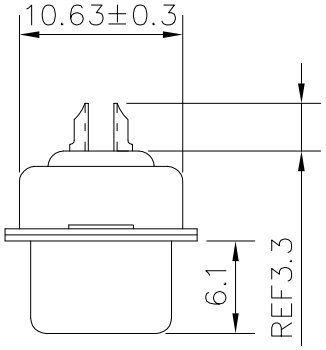

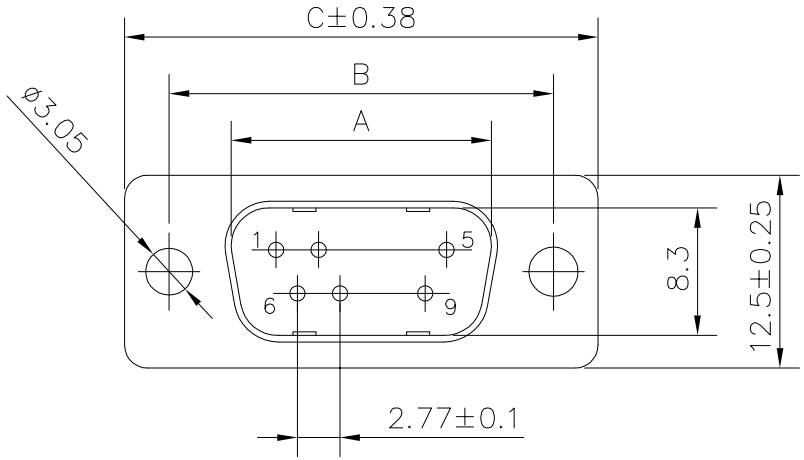

Current rating: 5 AMP.
Withstanding voltage: 1000V AC
Insulation resistance: 1000MΩ Min.
Temperature range: −55℃ to +125℃
ROHS compliant

Part No.:
B05−0XX3X1XN−02
No.of contact:
09: 9pos
15: 15pos
25: 25pos
37: 37pos
Housing color:
1: Black
5: White
6: Blue
Terminal plating:
4: full Au 2u"
5: full Au 1u"

Item	Desc.	Material	Remark
4	Rear shell	SPCC	Plating: Sn
3	Front shell	SPCC	Plating: Ni
2	Housing	PBT+30%GF	Color: see part no.
1	Terminal	Copper alloy	Plating: see part no.

SIDE	DATE	DESCRIPTION	APPROVER
4	2023/10/22	Add ROHS comment	Jack Chen
3	2023/08/16	Modified operating temperature	Jack Chen
1	2009/04/14	First edition ralease	Jing Li

QUALITY SYMBOLS
□: CRITICAL
⊠: MAJOR
▽: ZERO DEFECT
▽: S.P.C

Tolerance	
x.	±0.60
.x	±0.40
.xx	±0.25

NAME:	D-SUB male solder,machined pin				PART NO.	B05−0XX3X1XN−02	
REV:	D	UNIT:	mm	DRW BY	CHK BY	APP BY	DRAWING NO.
SCALE:	N:1	DATE:	2009/04/14	Huangmei	Jack Chen		B05−014

lineconn 东莞市林诚塑胶电子有限公司
http://www.lineconn.com
TEL:0769−85181660 85181770