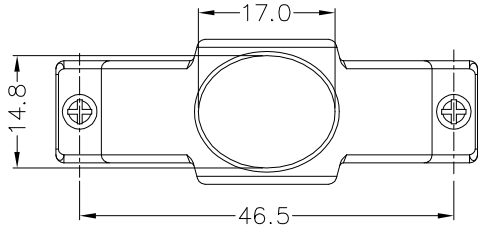

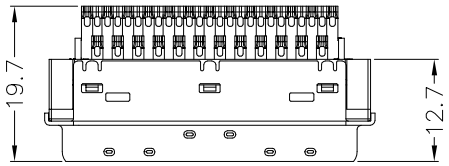

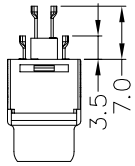

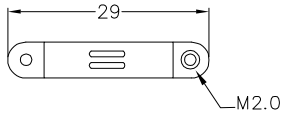

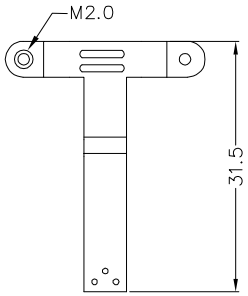

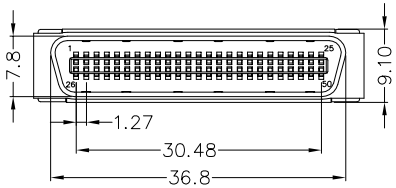

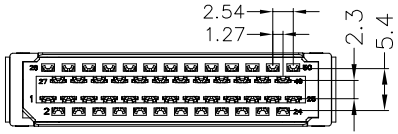

Contact current rating: 1 Amp
Dielectric withstanding voltage: 500V AC
Insulation resistace: 500MΩ Min.
Contact resistance: 35mΩ Max
Temperature range: −45℃ to +105℃
ROHS compliant
Part No.:
B01−050311X4−01
Solder area:
3: G/F
C: Sn

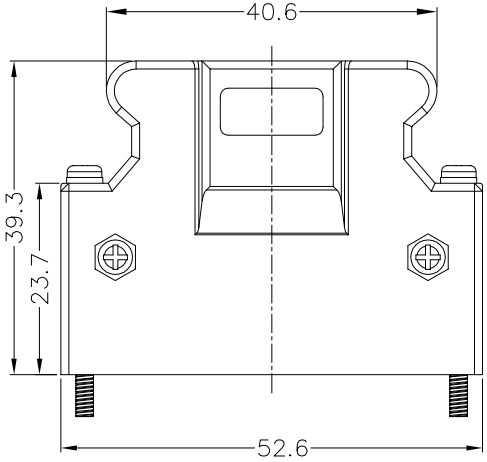

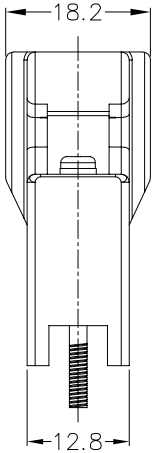

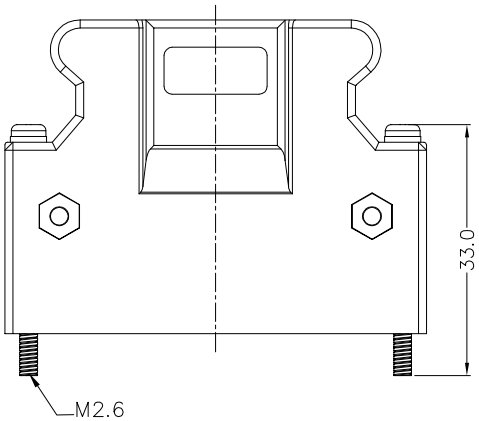

Item	Desc.	Material	Remaks
10	Screw	Steel	Plating: Ni,M2.0
9	Screw	Steel	Plating: Ni
8	Nut	Steel	Plating: Ni
7	Hood	PBT+30%GF	Color: black
6	Screw	Steel	Plating: Ni,L=33.0mm
5	Clamp	Steel	Plating: Ni
4	Cover	PBT+30%GF	Color: black
3	Housing	PBT+30%GF	Color: black
2	Shell	SPCC	Plating: Ni
1	Terminal	Copper alloy	Contact area: Au 3u" Solder area: see part no. Under−plating: Ni

SIDE	DATE	DESCRIPTION	APPROVER
3			
2	2023/11/09	Add ROHS comment	Shuo Cao
1	2021/04/24	First edition release	Shuo Cao

QUALITY SYMBOLS
□: CRITICAL
⊠: MAJOR
▽: ZERO DEFECT
▽: S.P.C

Tolerance	
X.	±0.60
.X	±0.40
.XX	±0.25

NAME:	SM(SCSI) 50pin male solder assembly plastic hood with screw 33.0mm				PART NO.	B01−050311X4−01	
REV:	B	UNIT:	mm	DRW BY	CHK BY	APP BY	DRAWING NO.
SCALE:	N:1	DATE:	2021/04/24	Huangmei	Shuo Cao		B01−046

Lineconn 东莞市林诚塑胶电子有限公司
http://www.lineconn.com
TEL:0769−85181660 85181770