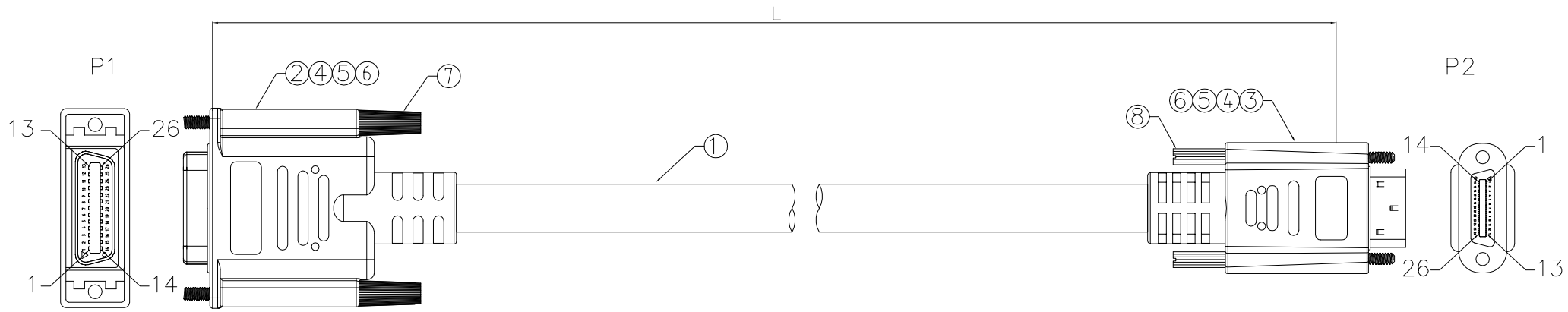

Wire Assignment:

P1	P2
2	25
15	12
3	24
16	11
4	23
17	10
5	22
18	9
6	21
19	8
7	20
20	7
8	19
21	6

P1		P2
9		18
22		5
10		17
23		4
11		16
24		3
12		15
25		2
1	Drain	1
14	Drain	14
13	Drain	13
26	Drain	26
Shell	Braid	Shell

Notes:
1.Electrical test: 100% open,short&miss wire test.
2.Conductor resistance: 5 ohms max.
3.Insulator resistance: 1m ohms min, dc 300v 0.01sec.
4.ROHS compliant
5.Part no. description: A10-02611XXX-05,
XXX: 001=length: 10cm

Item	Material	Description	Q'TY	UNIT
①	Cable	UL20276(1P*28AWG+AL)x11C+28AWG*2C+28AWG drain*4C+AB OD: 9.5mm,color: black,flexible cable	N/A	mm
②	Conn	MDR 26pin male solder	1	PCS
③	Conn	SDR 26pin male solder	1	PCS
④	Inner Mold	LD-PE	N/A	KG
⑤	Over Mold	45P PVC,black	N/A	KG
⑥	Copper Foil	Copper Foil	N/A	mm
⑦	Screw	M2.6 screw	2	PCS
⑧	Screw	M2.0 screw	2	PCS

SIDE	DATE	DESCRIPTION	APPROVER
3			
2	2022/04/26	Develop a new set of molds and change the shape	Jack Chen
1	2021/03/09	First edition release	Jack Chen

QUALITY SYMBOLS
□: CRITICAL
⊠: MAJOR
▽: ZERO DEFECT
▽: S.P.C

Tolerance

Length(mm)	Tolerance(mm)
300~2000	±50
2001~5000	±100
5001~	±150

NAME:	Camera Link MDR-SDR cable,four ground				PART NO.	A10-02611XXX-05	
REV:	A	UNIT:	mm	DRW BY	CHK BY	APP BY	DRAWING NO.
SCALE:	NONE	DATE:	2021/03/09	Qiang Liao	Jack Chen		A10-033

lineconn 东莞市林诚塑胶电子有限公司
http://www.lineconn.com
TEL:0769-85181660 85181770

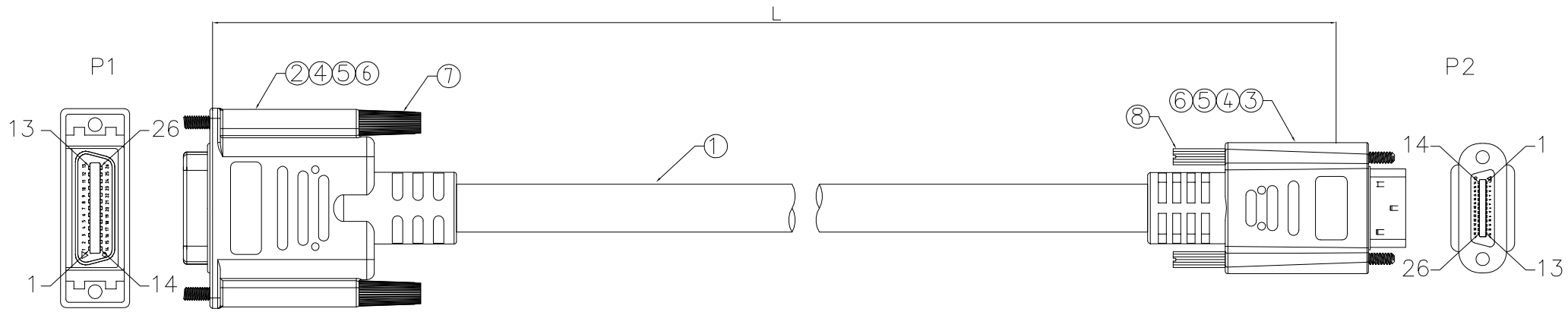

Wire Assignment:

P1	P2
2	25
15	12
3	24
16	11
4	23
17	10
5	22
18	9
6	21
19	8
7	20
20	7
8	19
21	6

P1		P2
9		18
22		5
10		17
23		4
11		16
24		3
12		15
25		2
1	Red	1
14	Drain	14
13	Drain	13
26	Black	26
Shell	Braid	Shell

Notes:
1.Electrical test: 100% open,short&miss wire test.
2.Conductor resistance: 5 ohms max.
3.Insulator resistance: 1m ohms min, dc 300v 0.01sec.
4.ROHS compliant
5.Part no. description: A10-02611XXX-01,
XXX: 001=length: 10cm

Item	Material	Description	Q'TY	UNIT
①	Cable	UL20276(1P*28AWG+AL)x11C+28AWG*2C+28AWG drain*4C+AB OD: 9.5mm,color: black,flexible cable	N/A	mm
②	Conn	MDR 26pin male solder	1	PCS
③	Conn	SDR 26pin male solder	1	PCS
④	Inner Mold	LD-PE	N/A	KG
⑤	Over Mold	45P PVC,black	N/A	KG
⑥	Copper Foil	Copper Foil	N/A	mm
⑦	Screw	M2.6 screw	2	PCS
⑧	Screw	M2.0 screw	2	PCS

SIDE	DATE	DESCRIPTION	APPROVER
3			
2	2022/04/26	Develop a new set of molds and change the shape	Jack Chen
1	2018/09/11	First edition release	Jing Li

QUALITY SYMBOLS
□: CRITICAL
⊠: MAJOR
▽: ZERO DEFECT
▽: S.P.C

Tolerance

Length(mm)	Tolerance(mm)
300~2000	±50
2001~5000	±100
5001~	±150

NAME:	Camera Link MDR-SDR cable,two ground				PART NO.	A10-02611XXX-01	
REV:	A	UNIT:	mm	DRW BY	CHK BY	APP BY	DRAWING NO.
SCALE:	NONE	DATE:	2018/09/11	Qiang Liao	Jack Chen		A10-004

lineconn 东莞市林诚塑胶电子有限公司
http://www.lineconn.com
TEL:0769-85181660 85181770