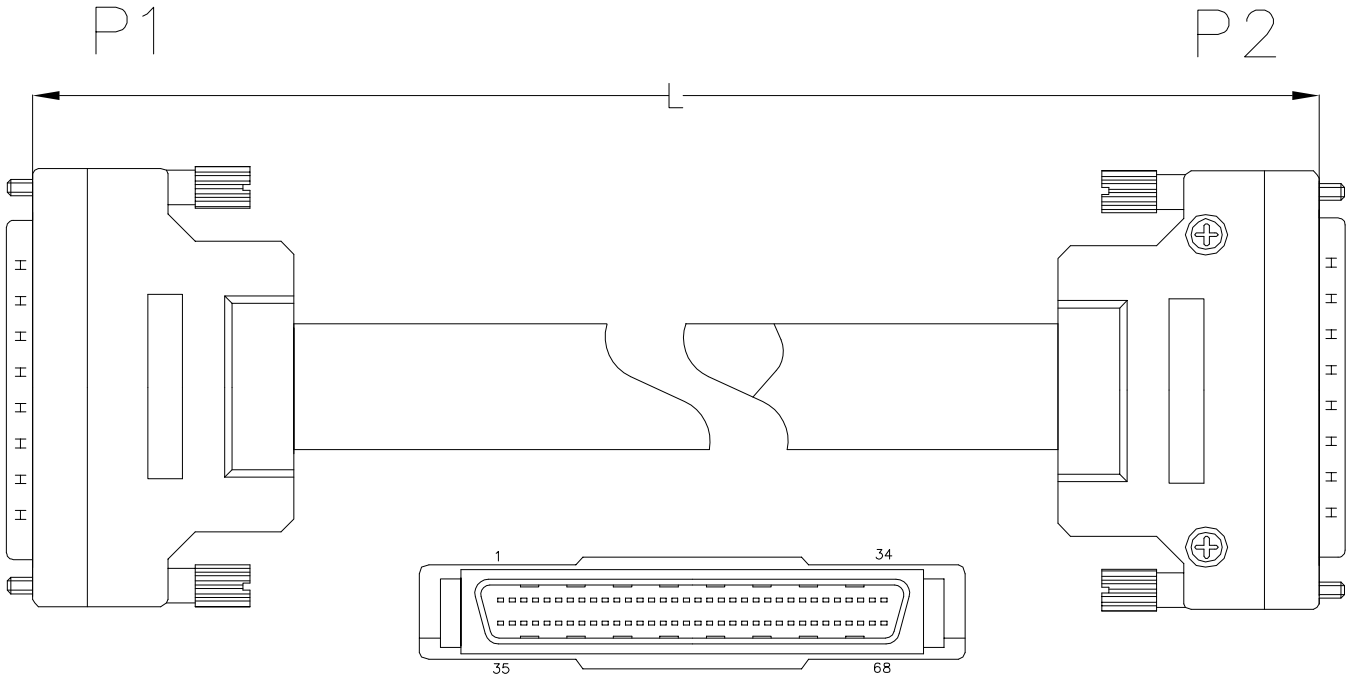

Pin assignment

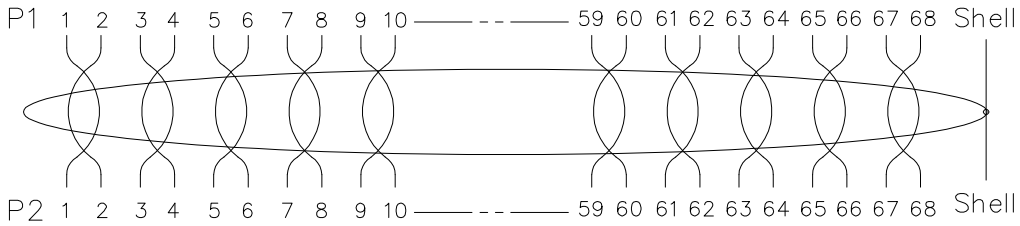

Part No.:
A09-06811XXX-X2
Length:
010: 1m
015: 1.5m
Connector type:
S: solder type
C: IDC type

Notes:
1.Electrical test: 100% open,short&miss wire test.
2.Conductor resistance: 5 ohms max.
3.Insulator resistance: 1m ohms min, dc 300v 0.01sec.
4.ROHS compliant
5.Part no. description: A09-06811XXX-X2,
XXX: 001=length: 10cm

Item	Part name	Description	QY'T
2	Cable	UL20276 28AWG*34P+AL+braid PVC jacket color: see part no. OD=10.00mm	1pcs
1	Connector	HPDB 68pin male,zinc alloy hood with screw	2set

SIDE	DATE	DESCRIPTION	APPROVER
3	2023/04/07	Change part number	Jack Chen
2	2021/09/29	Additional model	Jack Chen
1	2015/05/13	First edition release	Jack Chen

QUALITY SYMBOLS
□: CRITICAL
⊠: MAJOR
▽: ZERO DEFECT
▽: S.P.C

Tolerance

Length(mm)	Tolerance(mm)
300~2000	±50
2001~5000	±100
5001~	±150

NAME:	HPDB 68pin male-male cable,zinc alloy hood with screw				PART NO.	A09-06811XXX-X2	
REV:	C	UNIT:	mm	DRW BY	CHK BY	APP BY	DRAWING NO.
SCALE:	NONE	DATE:	2015/05/13	Qiang Liao	Jack Chen		A09-005

lineconn 东莞市林诚塑胶电子有限公司
http://www.lineconn.com
TEL:0769-85181660 85181770