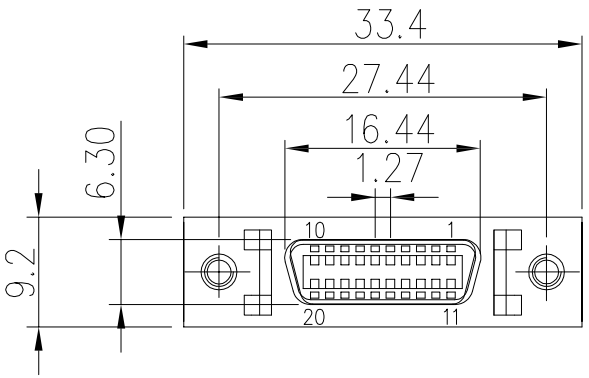

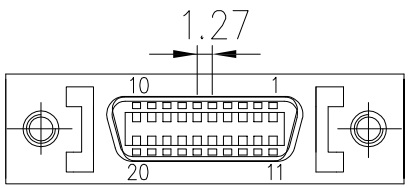

Current rating: 1 AMP.
Withstanding voltage: 500V AC
Insulation resistace: 500MΩ Min.
Contact resistance: 35mΩ max.
Temperature range: −55℃ to +125℃
ROHS compliant
Part No.:
B03−020411EB−0X
Bracket finishes:
L: latch bracket
S: screw bracket

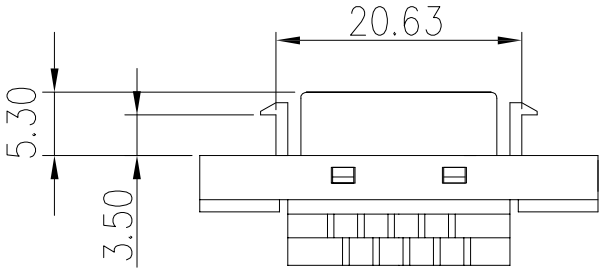

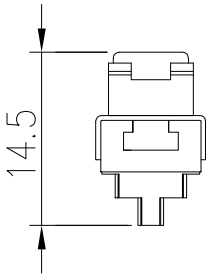

L type

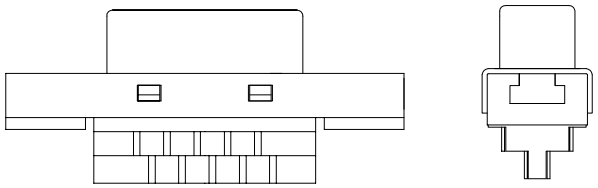

S type

Item	Desc.	Material	Remaks
5	Bracket	SPCC	Plating: Ni
4	Cover	PBT+30%GF	Color: black
3	Housing	PBT+30%GF	Color: black
2	Shell	SPCC	Plating: Ni
1	Terminal	Phosphor bronze	Contact area: Au 5u” Solder area: Sn Under−plating: Ni

SIDE	DATE	DESCRIPTION	APPROVER
4	2021/03/16	Add the ROHS label	Jack Chen
3	2021/03/10	Change tolerance	Jack Chen
1	2011/07/29	First edition release	Jing Li

QUALITY SYMBOLS
□: CRITICAL
⊠: MAJOR
▽: ZERO DEFECT
▽: S.P.C

Tolerance	
x.	±0.60
.x	±0.40
.xx	±0.25

NAME:	SCSI 20pin female solder,with support stand				PART NO.	B03−020411EB−0X	
REV:	D	UNIT:	mm	DRW BY	CHK BY	APP BY	DRAWING NO.
SCALE:	N:1	DATE:	2011/07/29	Jack Chen	Dean Fan		B03−092

lineconn 东莞市林诚塑胶电子有限公司
http://www.lineconn.com
TEL: 0769−85181660 85181770