Positions	A	B	C	D	E
14	12.96	25.2	36.0	44.0	22.7
24	23.76	35.9	46.8	54.8	33.5
36	36.72	48.9	59.7	67.7	46.4
50	51.84	64.0	74.9	82.8	62.0

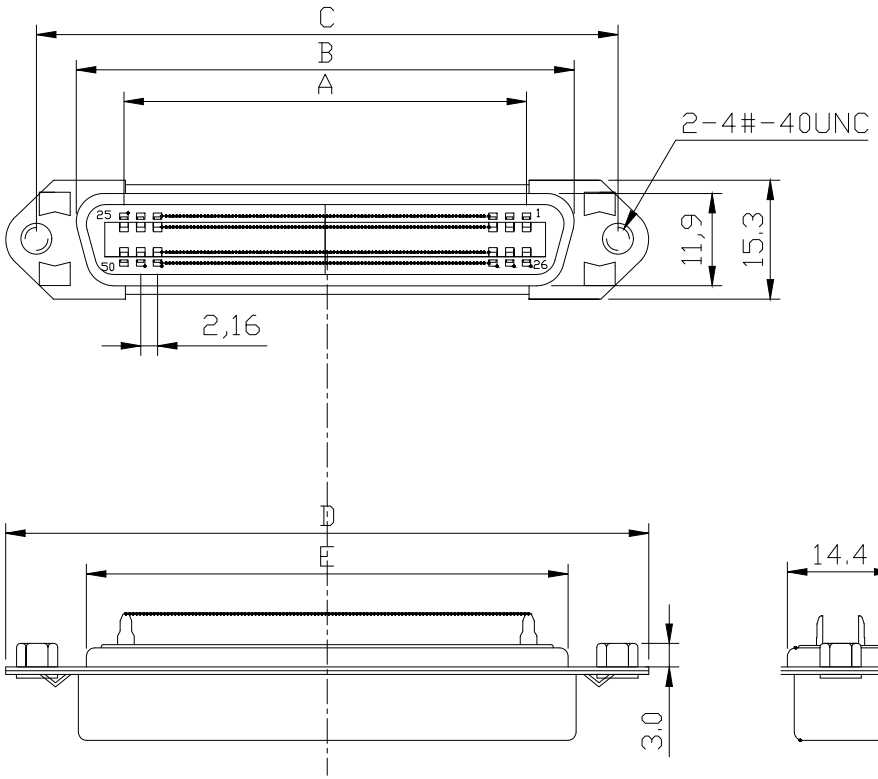

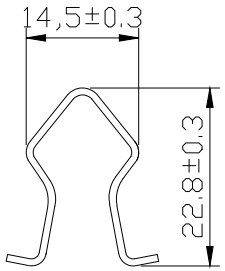

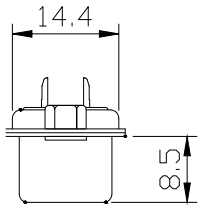

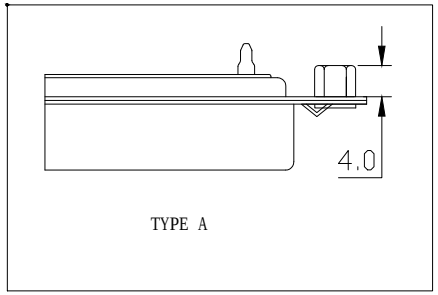

- **ELECTRICAL CHARACTERISTICS**

Contact Currect Rating: 5 Amp
Dielectric Withstanding Voltage: 500V AC
Insulation Resistance: 1000MΩ/Min
Contact Resistance: 35mΩ/Max
Operaion Temperature: −25°C ~ +85°C

- PART NO:

B17−0XX4X1AD−S4

CONTACT NO.:
14: 14PIN
24: 24PIN
36: 36PIN
50: 50PIN

HOUSING COLOR:
1:BLACK
6:BLUE

ITEM	DESC.	MATERIAL	REMAKS	PART REMAKS
4	HOUSING	PBT+G.F.30% (UL 94V−0)	COLOR: SEE PART NO.	
3	REAR SHELL	SPCC	PLATING: Sn	
2	FRONT SHELL	SPCC	PLATING: Ni	
1	TERMINAL	COPPER ALLOY	CONTACT AREA: G/F SOLDER AREA: Sn	

SIDE	DATE	DESCRIPTION	APPROVER
3			
2			
1	2013/03/07	新版发行	Jack Chen

QUALITY SYMBOLS
□: CRITICAL ⊠: MAJOR
▽: ZERO DEFECT ▽: S.P.C

Toleance	
x.	±0.80
.x	±0.50
.xx	±0.30

NAME:	57-简易母头焊线式,后铆通孔螺母,新四附耳(客户用图)			PART NO.	B17−0XX4X1AD−S4		
REV:	A	UNIT:	mm	DRW BY	CHK BY	APP BY	DRAWING NO.
SCALE:	N:1	DATE:	2013/03/07	Huangmei	Jack Chen		B17−010

Lineconn 东莞市林诚塑胶电子有限公司
http://www.lineconn.com
TEL:0769−85181660 85181770