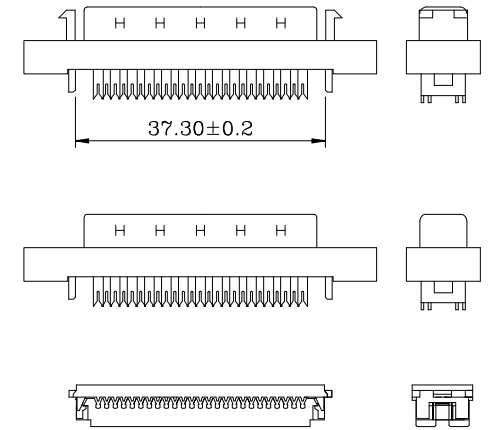

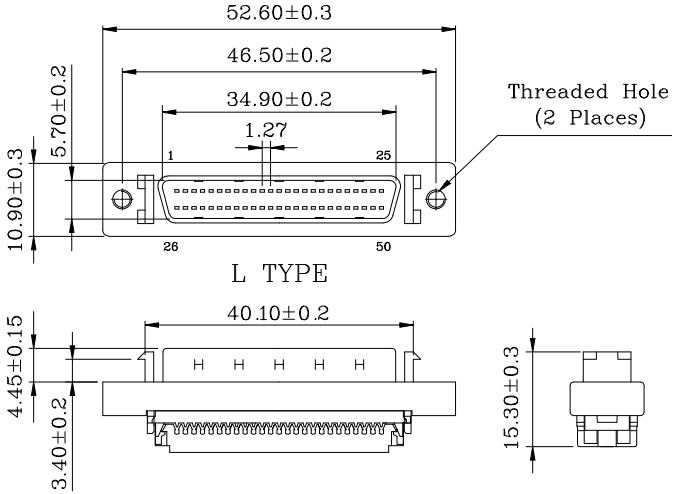

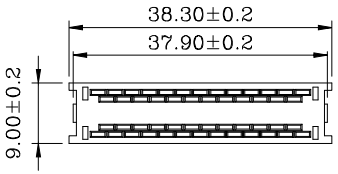

Termination Cover
(1 Places)

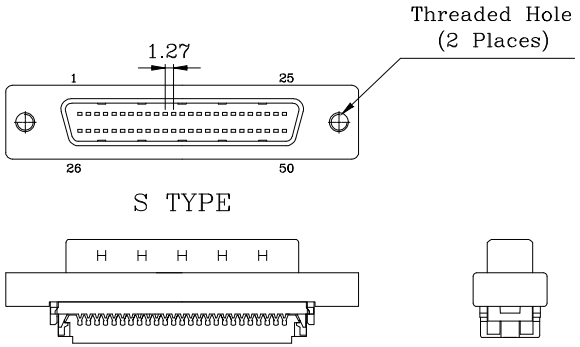

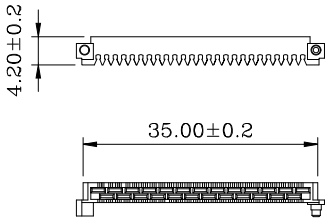

Wire Holder
(2 Places)

- Current Rating: 1 Amp
- Insulation Resistance: 500MΩ/Min
- Withstanding Voltage: 500V AC/Min
- Contact Resistance: 35mΩ Max
- Operaion Temperature: −25°C ~ +85°C

PART NO:
B02−050111EC−X X

WIRE HOLDER:
28AWG or 30AWG WIRE
6= 0.62mm
7= 0.75mm
9= 0.90mm

BRACKET FINISHES:
L:Latch bracket
S:Screw bracket

ITEM	DESC.	MATERIAL	REMAKS	PART REMAKS
5	SHELL	ZINC ALLOY	PLATING: Ni	
4	COVER	PBT+G.F.30% (UL 94V−0)	COLOR: BLACK	
3	HOUSING	PBT+G.F.30% (UL 94V−0)	COLOR: BLACK	
2	SHELL	SPCC	PLATING: Ni	
1	TERMINAL	PHOSPHOR BRONZE	CONTACT AREA: Au 5u" SOLDER AREA: Sn UNDER−PLATING: Ni	

SIDE	DATE	DESCRIPTION	APPROVER
A			
A			
A	2010/01/09	新版发行	King Zhou

QUALITY SYMBOLS
□: CRITICAL
⊠: MAJOR
▽: ZERO DEFECT
▽: S.P.C

Toleance	
x.	±0.80
.x	±0.50
.xx	±0.30

NAME:	SCSI PIN TYPE 50P MALE IDC刺破式 (客户用图)			PART NO.	B02−050111EC−X X		
REV:	A	UNIT:	mm	DRW BY	CHK BY	APP BY	DRAWING NO.
SCALE:	N:1	DATE:	2010/01/09	JACK CHEN	DEAN FAN		B02−044

lineconn 东莞市林诚塑胶电子有限公司
http://www.lineconn.com
TEL:0769−85181660 85181770