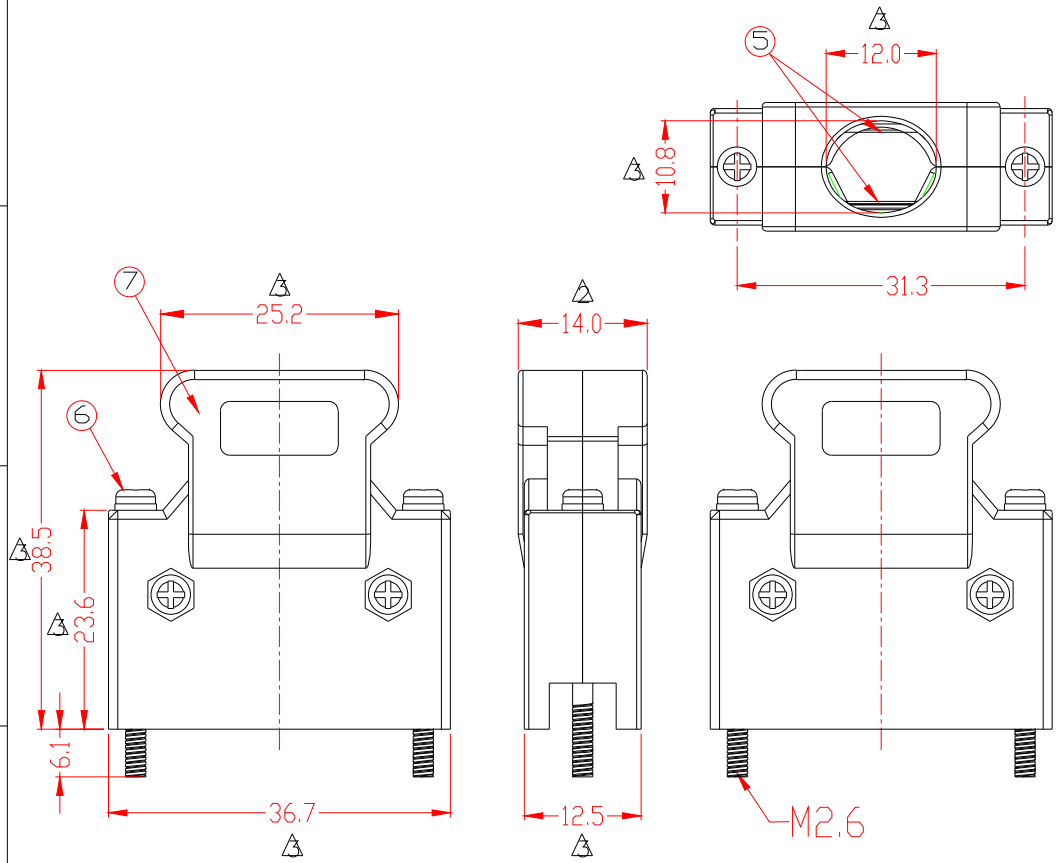

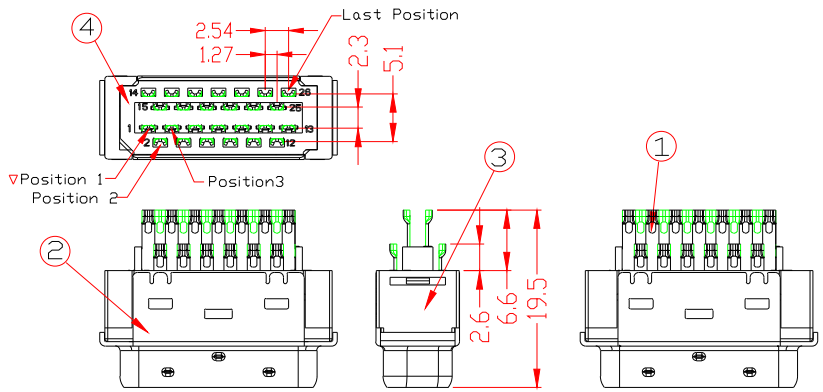

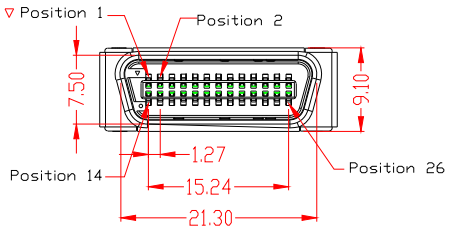

- **ELECTRICAL CHARACTERISTICS**

Contact Currect Rating: 1 Amp
Dielectric Withstanding Voltage: 500V AC
Insulation Resistance: 500MΩ/Min
Contact Resistance: 35mΩ/Max
△ Operaion Temperature: −25°C ~ +85°C

ITEM	DESC.	MATERIAL	REMAKS	PART REMAKS
7	HOOD	PBT+30%GF	COLOR: BLACK	
6	SCERW	STEEL	PLATING: NI	L=33mm
5	CLAMP	STEEL	PLATING: MATTE TIN AND NI	
4	COVER	PBT+30%GF	COLOR: BLACK	
3	HOUSING	PBT+30%GF	COLOR: BLACK	
2	SHELL	SPCC	PLATING: Ni	
1	TERMINAL	COPPER ALLOY	CONTACT AREA: Au 3u" SOLDER AREA: G/F UNDER-PLATING: Ni	

SIDE	DATE	DESCRIPTION	APPROVER
△3	2022/07/29	依客户要求新开外壳模具，变更尺寸，修改品名	JACK CHEN
△2	2017/10/12	依新开模具变更外壳尺寸，修正温度参数	HP GUAN
△1	2009/06/11	新版发行	KING ZHOU

QUALITY SYMBOLS
□: CRITICAL ⊠: MAJOR
▽: ZERO DEFECT ▽: S.P.C

Toleance	
x.	±0.80
.x	±0.50
.xx	±0.30

NAME:	SM 26P MALE SOLDER ASSEMBLY TYPE端子全金				PART NO.	B01-02631134-01	
REV:	C	UNIT:	mm	DRW BY	CHK BY	APP BY	DRAWING NO.
SCALE:	N:1	DATE:	2009/06/11	SHUO CAO	JACK CHEN		B01-013

lineconn 东莞市林诚塑胶电子有限公司
http://www.lineconn.com
TEL:0769-85181660 85181770