RoHS COMPLIANT

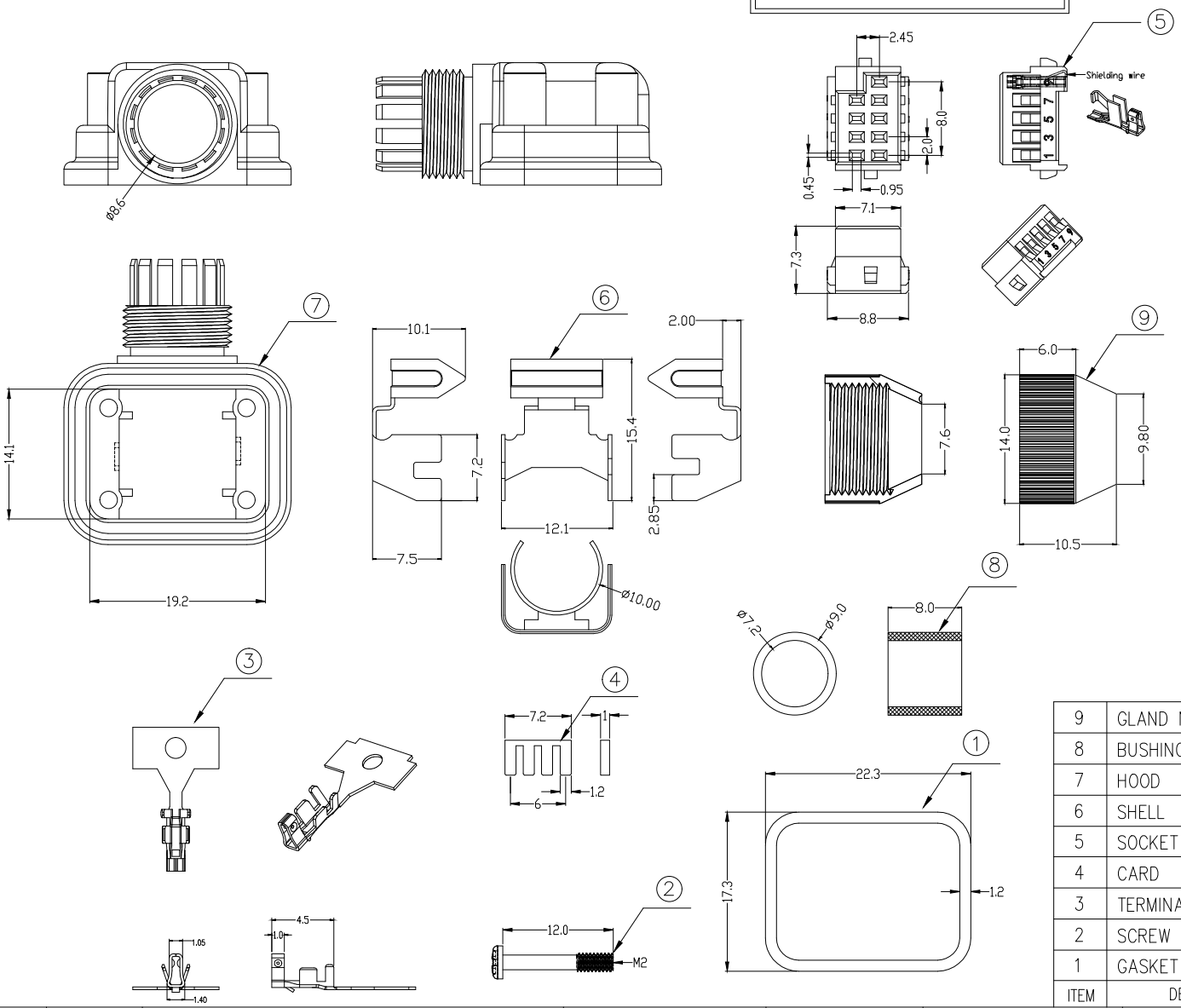

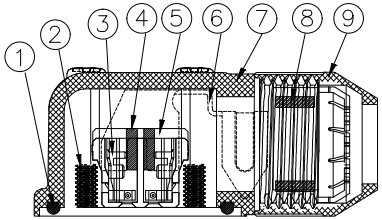

Voltage Current Rating:5 AMP.
Dielectric Withstanding Voltage:500V AC
Contact Resistance:30 mΩ Max.
Insulation Resistance:500MΩ Min.
Temperature Range:-20℃ to +85℃

ITEM	DESC.	MATERIAL	REMAKS	PART REMAKS
9	GLAND NUT	SYNTHETIC RESIN	COLOR: BLACK	1PCS
8	BUSHING	SYNTHETIC RESIN	COLOR: BLACK	1PCS
7	HOOD	SYNTHETIC RESIN	COLOR: BLACK	1PCS
6	SHELL	SPCC	PLATING: Ni	1PCS
5	SOCKET INSULATOR	SYNTHETIC RESIN	COLOR: BLACK	1PCS
4	CARD	SYNTHETIC RESIN	COLOR: BLUE	2PCS
3	TERMINAL	COPPER ALLOY	PLATING: G/F	8PCS
2	SCREW	STEEL	PLATING: Ni	4PCS
1	GASKET	SYNTHETIC RUBBER	COLOR: BLACK	1PCS

SIDE	DATE	DESCRIPTION	APPROVER
3			
2			
1	2019/10/09	新版发行	King Zhou

QUALITY SYMBOLS
□: CRITICAL
⊠: MAJOR
▽: ZERO DEFECT
▽: S.P.C

Toleance	
x.	±0.80
.x	±0.50
.xx	±0.25

NAME:	三菱伺服 9P编码器线防水连接器 (客户用图)			PART NO.	B01-00911154-01		
REV:	A	UNIT:	mm	DRW BY	CHK BY	APP BY	DRAWING NO.
SCALE:	N:1	DATE:	2019/10/09	DAWN HU	KING ZHOU		B01-029

lineconn 东莞市林诚塑胶电子有限公司
http://www.lineconn.com
TEL:0769-85181660 85181770